SPRT®

SP-EU8010/EU8011 PRINTING UNIT USER'S MANUAL

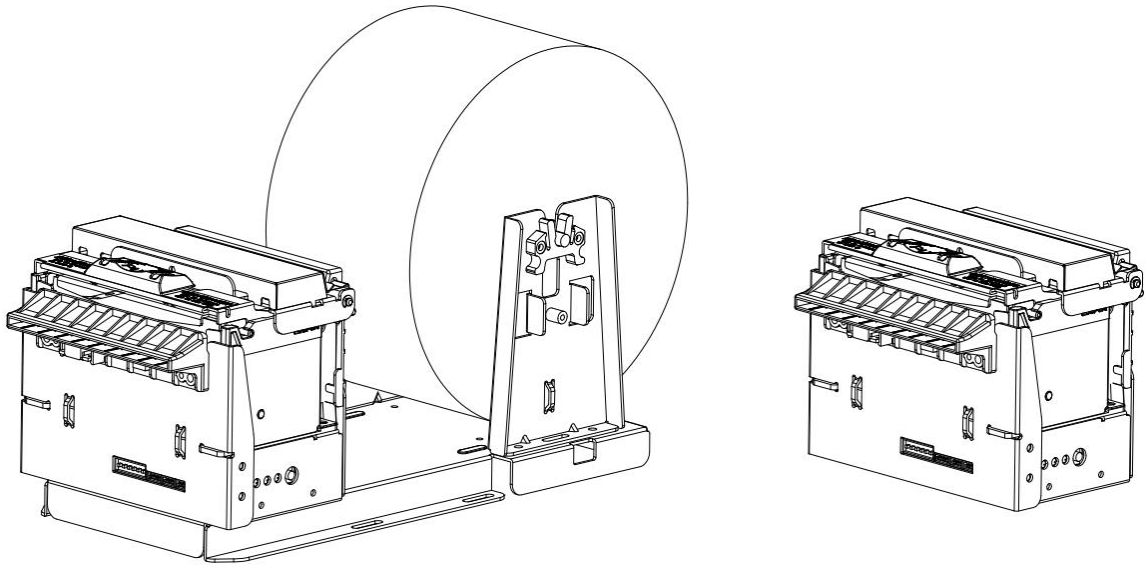

（Ver 1.00）

Beijing Spirit Technology Development Co.,Ltd

Safety Instruction

Safety warming

1)The print head is heating parts, during printing and end printing, do not touch the print head and surrounding parts.

2)Do not touch the surface of the print head and connection socket, avoid the electrostatic damage the print head.

Notice

1) Printing units should be installed in a flat, stable place;

2) Keeping enough space around the printing units to be convenient for operation and maintenance;

3) Far away from water for all printing units;

4) Do not use and store printing units in high temperature, damp and polluted places. Avoid sunlight, strong light and heat direct sources;

5) Avoid the printing units in the vibration and impact;

6) Avoid the damp air condensation on the surface of the printing units. If condensation has been formed, do not open the power of the printing units before the dew disappear;

7) Keep the printing units power adapter connected to a properly grounded outlet; avoid using the same socket with large motor or other devices which can lead to the power supply voltage fluctuation;

8) If long time will not use the printing units, please disconnect the power of the power adapter;

9) To avoid water or conductive material into the printing units interior, once occurred, should immediately shut off the power;

10)Printing units shall not be print under the conditions of no paper,otherwise will seriously damage the printing roller and the thermal print head;

11)In order to guarantee the print quality and the product life,suggest to use same quality paper as recommended;

12)In the case of print effect meets the requirement, suggest users to set lower level concentration of print as much as possible, to avoid affect the life of the print head;

13)The user shall not be removed printing units for maintenance.

Content

Brief Introduction 1
Chapter 1 Characteristics and performance 2
1.1 Print performance 2
1.2 Print paper 2
1.3 Character set 2
1.4 Interface 3
1.5 Printing control command 3
1.6 Power supply 3
1.7 Dimension and installation instructions 4
1.8 Dam-board Function 7
1.9 Work Environment 7
Chapter 2 Operating instructions 8
2.1 Printing Unit components 8
2.2 Instructions for paper install 9
2.2.1 Paper Loading 9
2.2.2 Solution for paper jam of cutter 10
2.3 Interface connection 10
2.3.1 Serial interface connection 11
2.3.2 USB Interface 12
2.3.3 Power supply connection 13
2.4 Lights and buttons operation 13
2.5 Normal working mode 15
2.6 Paper loading(Manual operating) 15
2.7 Self-test 15
2.8 HEX Printing mode 15
2.9 The printer parameters setting 16
2.10 Printing mode setting 16
2.11 Restore default parameters 16
2.12 Printer upgrade 17
2.12.1 Upgrade firmware under holding 16
2.12.2 Upgrade firmware in boot 16
2.13 Label calibration in label mode 17
2.14 Installation and use notes 18
Chapter 3 Other information 19
3.1 Instruction programming manual 19
3.2 Description of black mark pre-printing 19
3.3 Label paper description 20
Appendix A: Parameters setting 20

Brief Introduction

SP-EU8010/EU8011 printer is a new thermal line panel printer, with drop-in paper easy loading,auto cutter, black mark detecting function ,it has a faster printing speed and it is more reliable.

SP-EU8010/EU8011 printer is easy to operate, widely used in multiple fields, especially apply to queuing machine, POS for bank and various commercial fields that require document printing.

Statement

This product is belong to class A. In the living environment, this product may cause radio Interference. In that case, the user need to take practical measures to interference

Model Classification

Model	Interface	Have bracket or not	Anti-jamming and Anti-pulling
SP-EU8010SU	USB+RS232	/	/
SP- EU8011SU	USB+RS232	have	/

Chapter 1 Characteristics and performance

1.1 Print performance

- Printing method:direct line thermal;
- Print Paper: thermal paper; thermal black mark paper; thermal label paper
- Space between label paper: 2-3mm
- Printing paper width:79.5±0.5mm, 82±0.5mm。
- Resolution:8dot/mm,576dot/line
- Printing speed: Receipts：150mm／s（max）; Label： 130mm／s（max）
- MCBF: for receipts printing

  (1) Printing head life:100km

  Operating conditions:

  * Print font 12 × 24 ASCII,printing 50 lines per time,Intermittent reprint.

  * Thermal paper

  (2) Auto cutter life:1,000,000 cuts.
- Effective printing width:72mm

1.2 Print paper

- The mode of thermal paper:TF50KS－E（Japan paper co.ltd）
  AF50KS-E(JUJO THERMAL)
- Thermal paper roll: width ---------- 79.5±0.5mm, 82±0.5mm
  thickness ----------0.06-0.08mm(thermal paper);
  0.12-0.15mm(label paper)
  Paper roll diameter-------150mm (Max)
  The printing paper roll needs to match the paper shaft when the diameter of paper roll is exceeds 80mm

1.3 Character set

- ANK character set:
  12×24dot ,1.5（width）×3.00（high）mm
  8×16 dot,1.0（width）×2.00（high）mm
  9×17dot,1.0（width）×2.00（high）mm
- Chinese:
  24×24dot,3.00（width）×3.00（high）mm
  16×16dot,2.00（width）×2.00（high）mm

1.4 Interface

● RS232 serial port:

PDK-5PIN socket(pin point),support XON/XOFF and DTR/DSR.

Baud rate:1200,2400,4800,9600,19200,38400,57600,115200bps adjustable.

Data structure:One start bit ＋ (7 or 8)data ＋ one stop bit.

Verify:No validation or odd and even check is optional.

●USB port:

Standard USB port.　PH-4PIN port.

1.5 Printing control command

● Characters print command:support the double width and height printing of ANK characters,self-defined characters and Chinese; characters lines spacing can be adjusted.

● Bitmap print command:Support printing bitmaps with different density and downloaded graphics.

● GS bar code print command :support UPC-A,UPC-E,EAN-13,EAN-8,CODE39,ITF25,CODABAR, CODE93,CODE128,PDF417,QR Code,DATA Matrix bar code print.

1.6 Power supply

● DC24V±10%，2A，VH3.96-2PIN power socket

1.7 Dimension and installation instructions

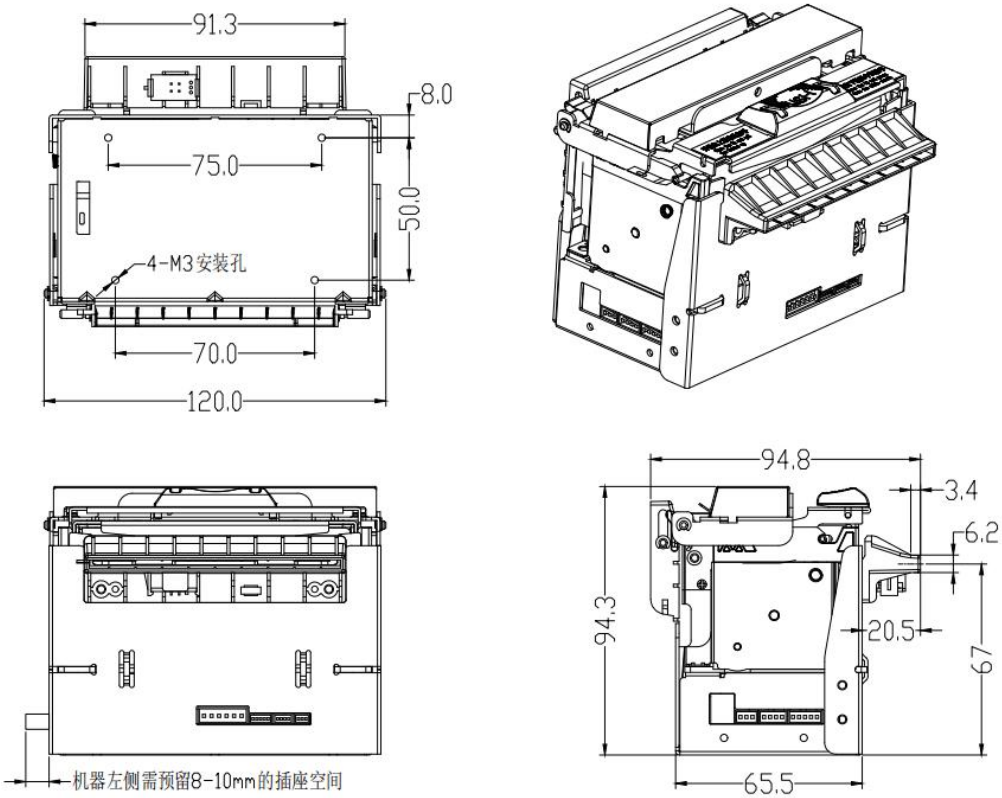

SP-EU8010SU (Standard Model)

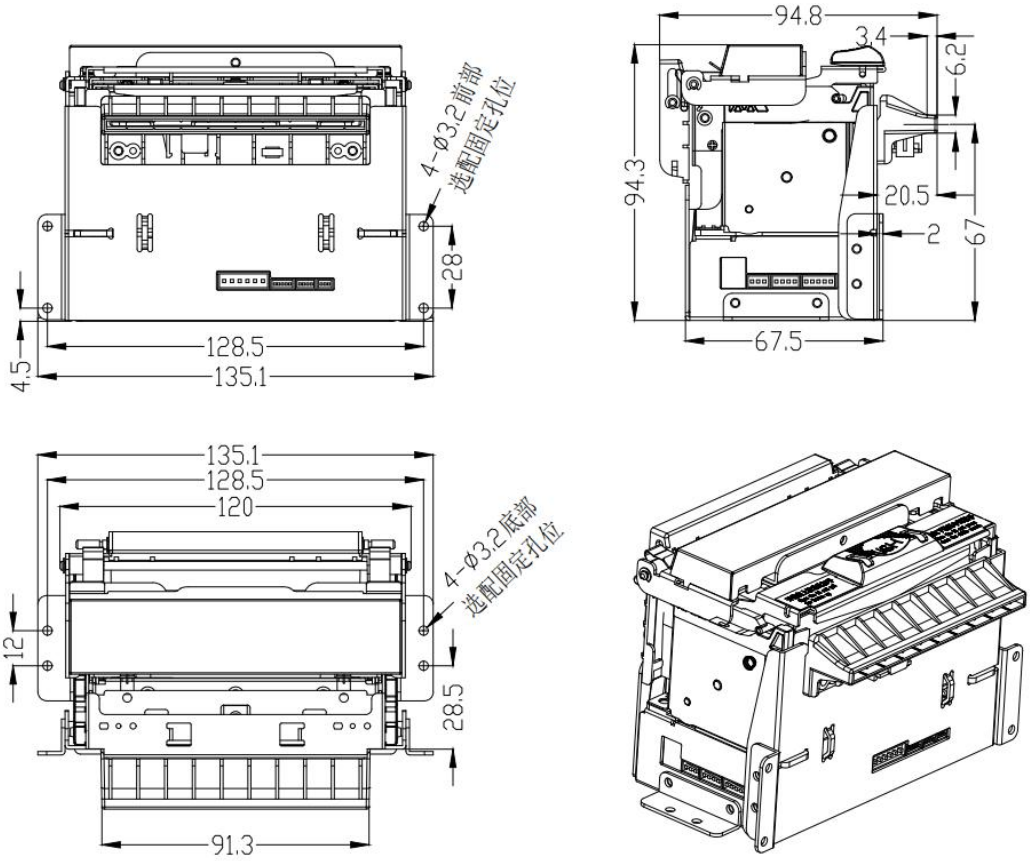

SP-EU8010SU

（fixed plate on the bottom and front are optional accessories)

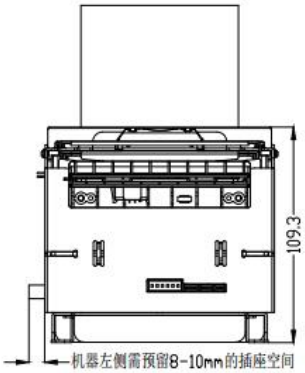
109.3
机器左侧需预留8-10mm的插座空间

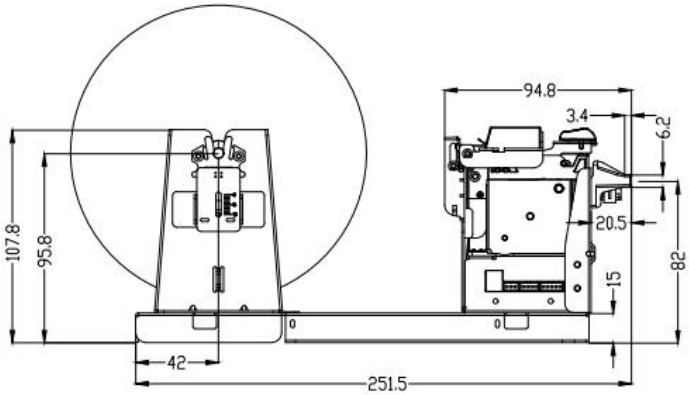
94.8
3.4
6.2
107.8
95.8
20.5
82
15
42
251.5

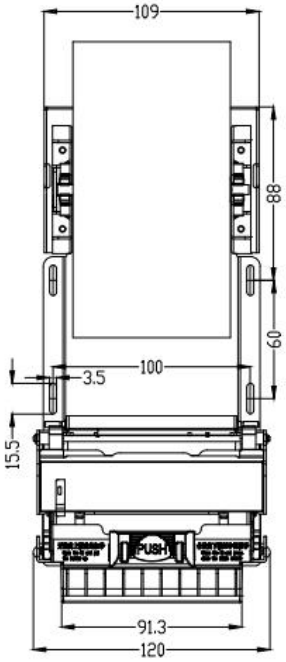
109
88
60
100
3.5
15.5
PUSH
91.3
120

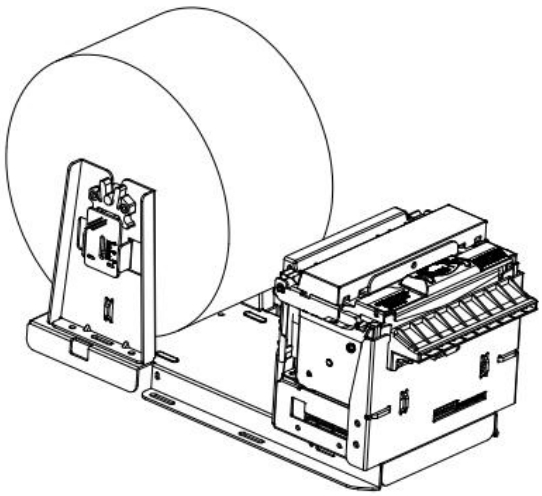

SP- EU8011SU

1.8 Dam-board Function

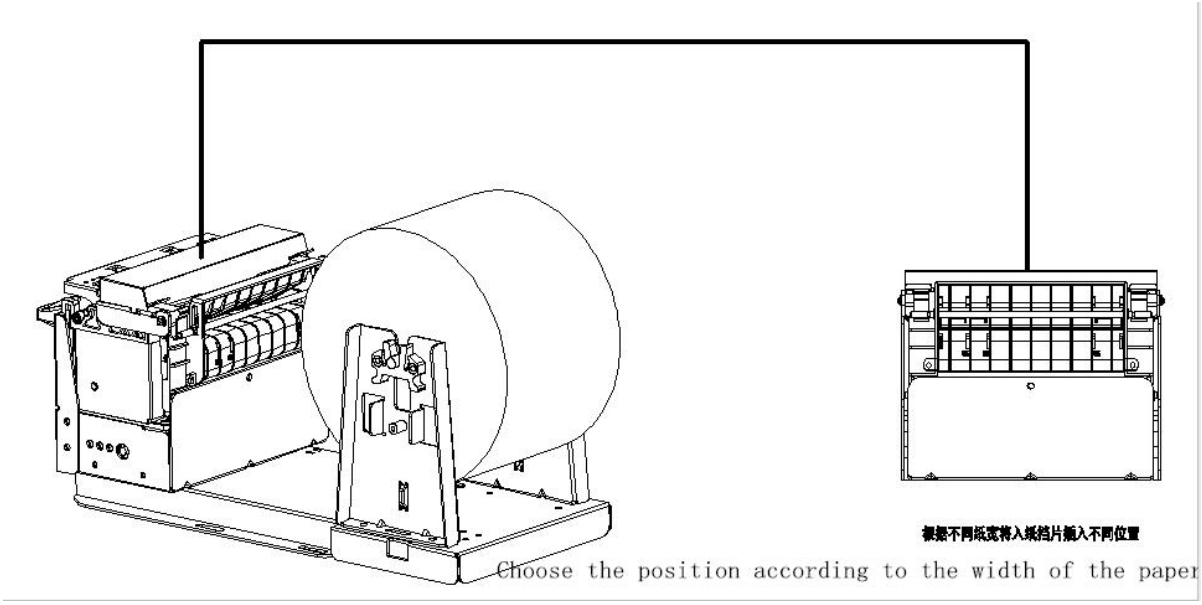

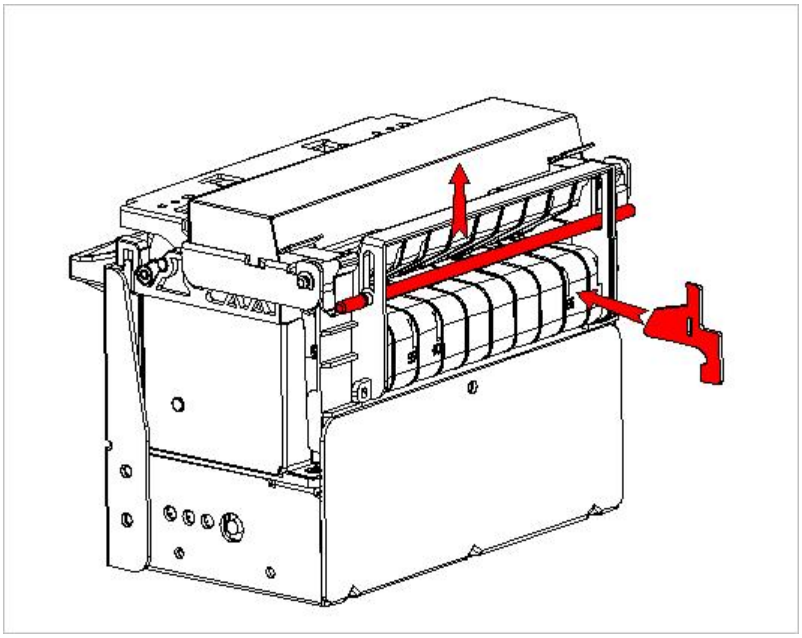

When using the dam-board, lift the buffer shaft first, and then insert it into the hole.

1.9 Work Environment

- Working stability: 0 ~ 50℃ Operating Relative Humidity: 10% ~ 80%
- Storage stability: -20 ~ 60℃ Storage relative humidity: 10% ~ 90%

Chapter 2 Operating instructions

2.1 Printing Unit components

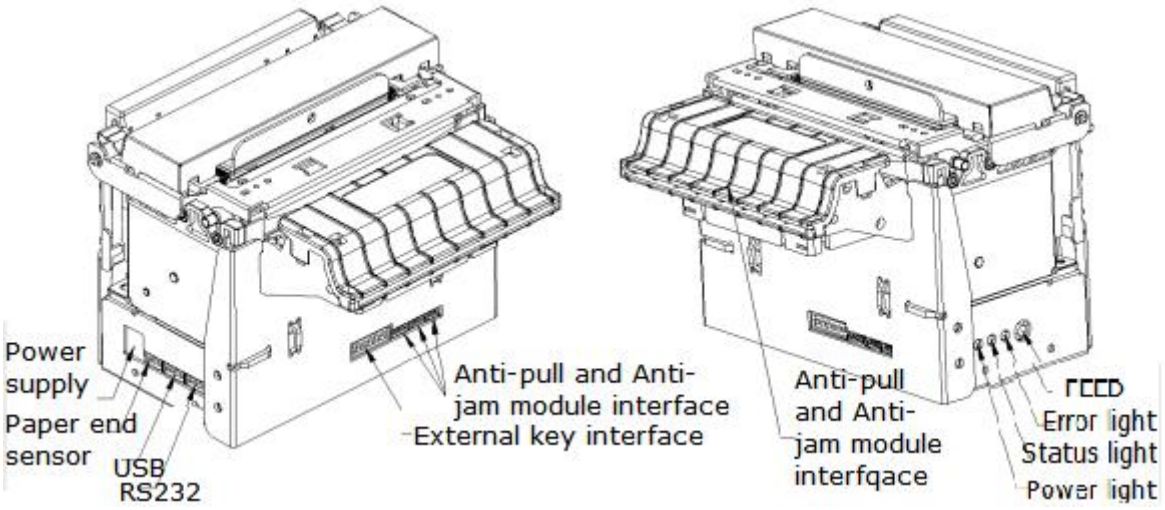

SP-EU8010SU

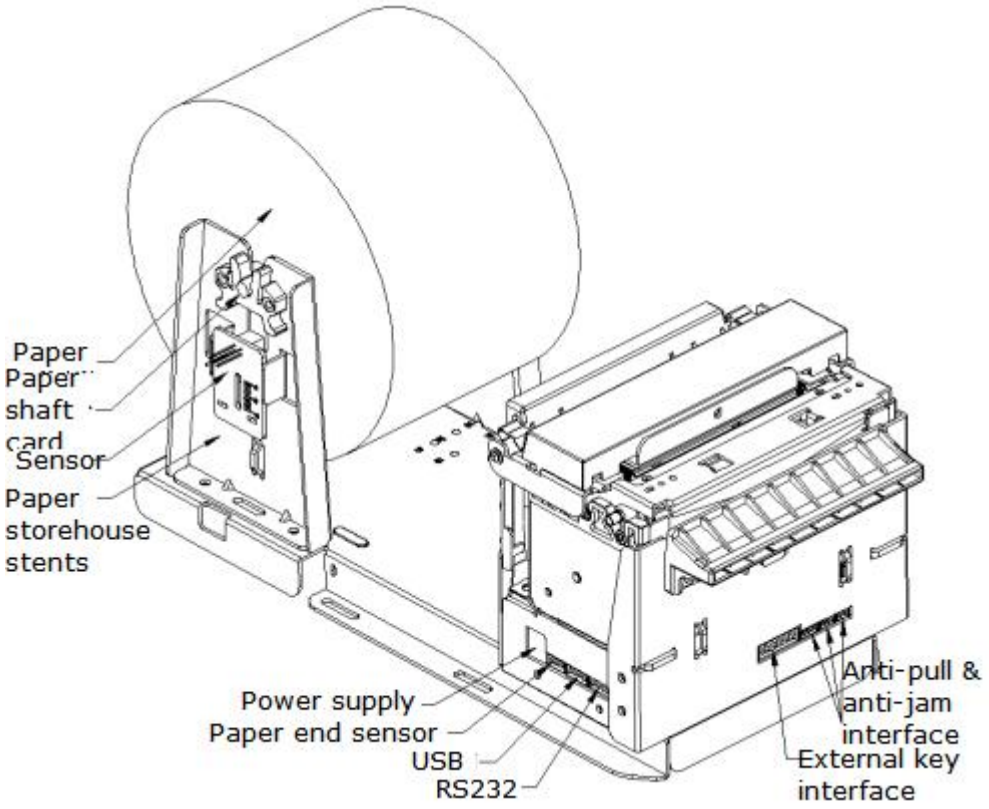

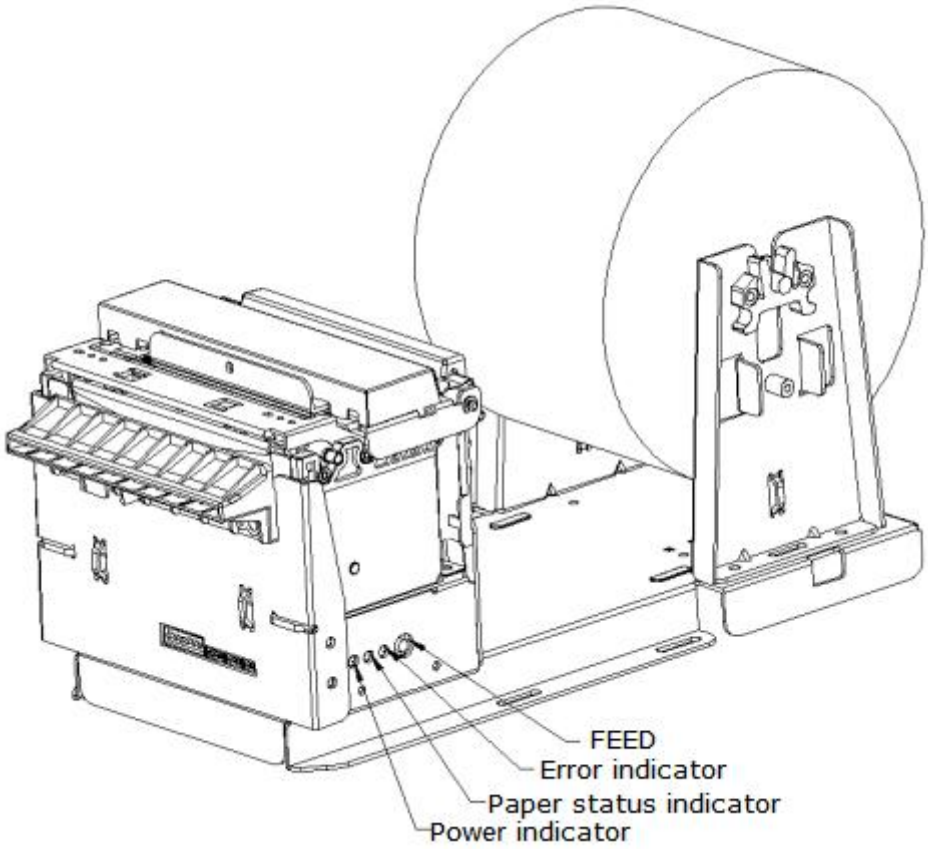

SP- EU8011SU

Note: The upper part is called printer mechanism after open the cover, hereinafter referred to as printer head

2.2 Instructions for paper install

2.2.1 Paper Loading

Thermal paper installed as below:

In the state of power-on, pull out a little from the paper roll, then put the paper into the mouth of printing mechanism, the printer will auto paper feeding .

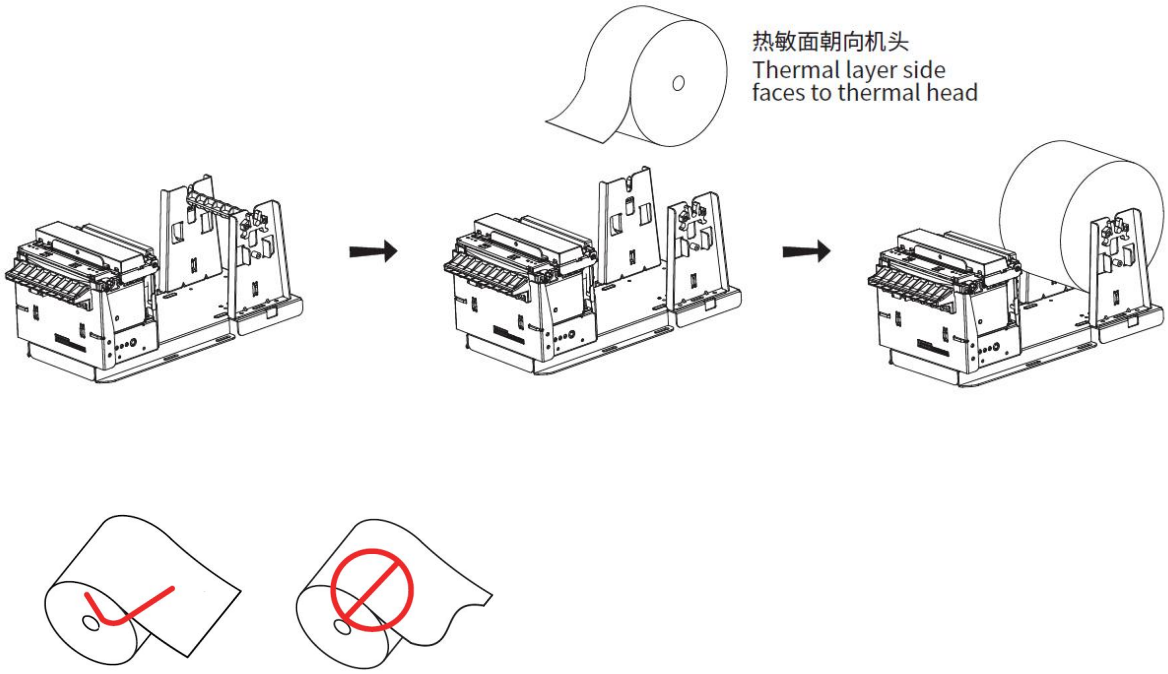

Note: make sure the paper is cut flat when loading.

△Attention

1.Pay attention to in the direction of the paper roll, keep the print surface towards the head.

2.Please do not move the paper forward or back by hands.

3.Keep clean for the printer head or will effect the quality of the Printing

2.2.2 Solution for paper jam of cutter

If the cutter is jammed, turn off the power and turn on the printer again, the cutter will recover.

2.3 Interface Connection

2.3.1 Solution for paper jam of cutter

2.2.3 Anti-jamming and Anti-pulling function

During printer work, the user tears paper, pull the paper and jams the paper. This type of operation triggers the printer's Anti-jamming and Anti-pulling function, as follows:

(1) The user tears paper, pull the paper will triggers the printer's Anti-jamming and Anti-pulling function, the printer will automatically cut paper to avoid other abnormal phenomena such as paper dislocation caused by tear paper and pull paper. After the cutter is finished, it will automatically resume the normal printing state.

(2) Artificial jam will triggers the printer's Anti-jamming and Anti-pulling function, The printer will stop printing until there is no paper jam, the printer automatically returns to the normal printing state.

(3) If the printer configured with the function of no taking the paper: after the completion of cutting , if not taking the paper, the anti-jamming and Anti-pulling module will give a light alarm, and it will automatically return to the normal printing state after taking the paper with normal data.

Note: it is necessary to confirm whether the no taking the paper function is supported. If so, when designing products, we need to consider a single get application scenario to avoid not taking the paper then leads to not printing.

2.3 Interface connection

2.3.1 Serial interface connection

SP-EU804/EU805 printer serial interface is compatible with RS-232C,support DTR/DSR and XON/XOFF handshaking protocol. Its interface is PH-5PIN pin type socket outlet. The pin number of serial interface socket as shown in figure 2-1:

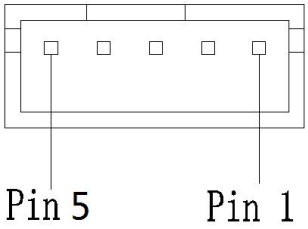

Each pin signal is defined as below:

Pin No.	Signal name	Signal direction	Source	Explain

1	RTS	output	printer	Same as pin 4 :DTR
2	TXD	output	printer	Printer send control code XON/XOFF and data to computer.
3	RXD	input	host	Printer receive data from computer
4	DTR	output	printer	When the signal show "MARK", it is means the printer is busy and can not receive data, when the signal show " SPACE", it is mean the printer get ready and can receive data.
5	GND	----	----	Signal ground

Mark: ①"Source"means the place of the signal from

② Signal logic level for EIA

The baud rate and data structure have been set as 115200bps/8 data bits/no calibration and 1 stop bit under connected as serial. SP-EU8010/SP-EU8011 printer's serial interface can be connected to the standard of RS-232C interface.The correct wiring method is as shown in Figure 2-2.

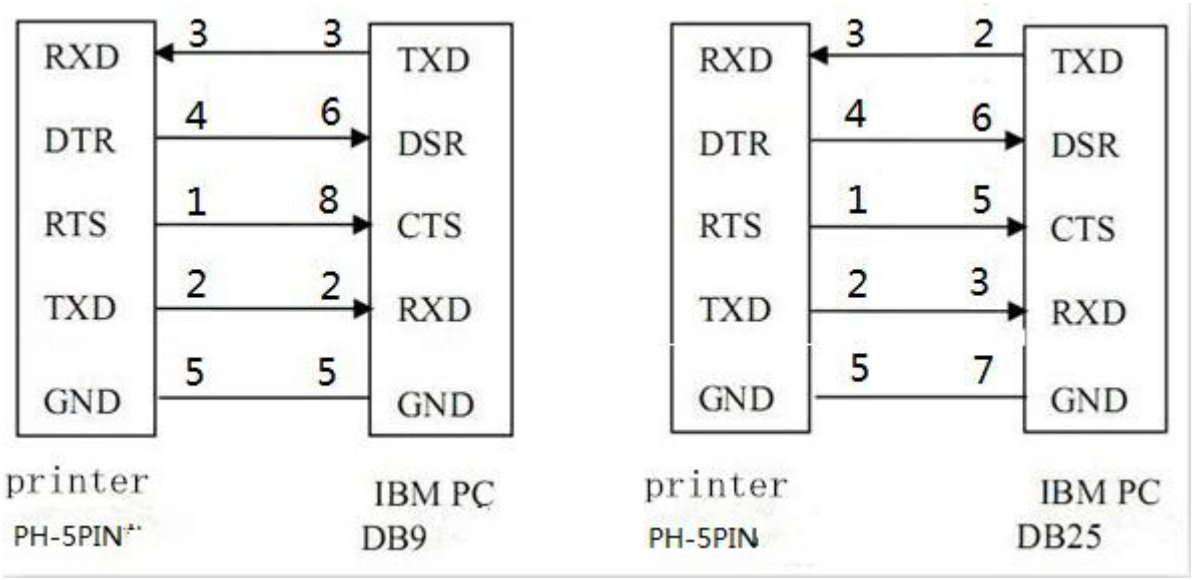

Figure 2-2.

2.3.2 USB Interface

USB interface : PH-4PIN interface :

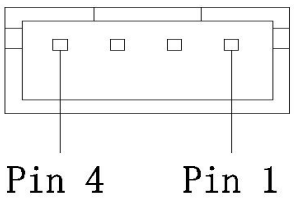

Pin	Function	Remark
1	V BUS	Power 5V
2	Data-	Data-
3	Data+	Data+
4	GND	GND

Fig 2-4 Definition of USB socket and pin

2.3.3 Power supply connection

SP-EU8010/SP-EU8011 printer is externally connected to 24V±10%, 2A power supply, and the socket is VH3.96-2PIN type. The shape and pin definition are shown in Figure as below.

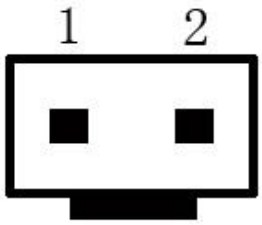

Pin No.	Signal
1	+24VDC
2	GND

Fig 2-6 Definition of power socket and pin

2.4 Lights and buttons operation

SP-EU8010/SP-EU8011 printer has one button and three lights.

【FEED】button: It is paper feeding button, available to print commands allow or prohibit button switch function, in the condition of allow button control, press 【FEED】button printer feeding paper, loosen【FEED】button, stop feeding paper.

【POWER】indicator: It's green. POWER indicator lighting means printer has been switched on .

【PAPER OUT】indicator: Paper status indicator, red; Light on or flashing indicates that the printer paper status is abnormal; When the printer is out of paper, the indicator light is always on. When the paper is about to run out, the indicator light flashes quickly. When the paper is jammed, the indicator light is at a certain frequency, see figure below. 

【ERROR】 indicator: Error status indicator, red. When the printer works well, error light is off. The light flashes to indicate abnormal alarm status. When the indicator is long bright, it means the printing mechanism rubber roller opens on the process of printing.

The Error light flashes: means there are something wrong with printer.

According to blink in a different way, indicate the different types of printer error:

1,Non-recoverable error, the times of light flashes indicate the type of error, then the light will on for a period.

2,Recoverable errors, the times of light flashes indicate the type of error, then will light-off for a period.

3,Automatic recovery error, the lights will flash continuous.

4,Paper out,lack of light long on paper. When printing on the rubber roller no longer test for a lack of printer paper, only check whether have paper.

Show as below:

a. Non-recoverable error, the lights will flash for many times later will lighting for a period, then circulation, the times of the lights flashing show the errors type.

Error type	Error description	ERROR lights flash type
Non-recoverable error	LED flash once:Memory read error	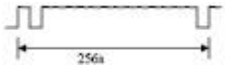
	LED flash two times:Overvoltage	
	LED flash three times:Under voltage	
	LED flash four times:The CPU execution error (error address)	
	LED flash six times:FLASH write error	
	LED flash seven times:Write error parameter	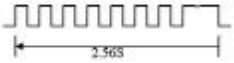
	LED eight times:Temperature detection circuit error	

b. Recoverable errors, the lights will flash continuous, then light-off for a period.

Error type	Error description	ERROR lights flash type
Recoverable errors	LED flash once :cutter position error	

c. Automatic recovery error, the lights will flash continuous. Including the print head temperature error and the upper cover to open the print process error.

Error type	ERROR lights flash type	ERROR lights flash type
Recoverable errors	LED flash continuous: the printer head is overheating, or open the wrong printing mechanism in the process of printing roller.	

2.5 Normal working mode

When printer is off,【printing rubber roller】is closed, then open the power button, Status indicators and paper out indicator shine alternately twice and then off, printer enter into the normal working mode.

2.6 Paper loading(Manual operating)

Press 【FEED】button in power-on state, the normal paper will began loading, let go of the 【FEED】button, paper loading will stop; the printer will began loading and stop on the space of black mark / label paper when press 【FEED】button, if you are not using black mark or label paper, the printer will stop after loading a 26cm length paper and signals an error of paper out.

2.7 Self-test

Self-test can detect the printer is working correctly or not, if it can print out self-test receipt correctly, it is mean everything is normal except the port connection with PCB board, or will be need repaired.

Self-test print out in sequence: name of manufacture,printer mode,software version,interface type,parameter default value of printer's,96 characters in the ASCII code,default code page content(set the language as English)or Chinese character name(if language set as Chinese),bar code type.

The self-test method is press the button of 【FEED】to open the power supply, then the printer will print out the self-test receipt.

2.8 HEX Printing mode

According to below steps, make the printer enter into the HEX printing mode.

1, Open the rubber roller of printing agencies;

2, Press the button of【FEED】then open the power supply:

3,Close the rubber roller printing agencies, then print out three lines content as below:

Hexadecimal Dump

To terminate hexadecimal dump,

Press FEED button three times.

It is means the printer has enter into HEX printing mode, under this mode all the input content will be printed out as HEX DUMP, the paper will online after press the 【FEED】button once, totally three times, print out "*** Completed ***", quit HEX DUMP mode.

2.9 The printer parameters setting

This function is to set up some simple parameters for the printer.

Enter into parameter setting method:

In shutdown mode, open the【printing rubber roller】first, press the button of【FEED】, then open the power supply, after the status indicators and lack of paper lights flashing alternant release the button of【FEED】. Press the button of 【FEED】twice again, then close the【printing rubber roller】. The printer enter into parameter setting mode. And print out the first item of parameters and its current value which can be setted. The details for setting method reference appendix A.

The method to quit the parameter setting

Open the 【printing rubber roller】first, press the button of 【FEED】, then close the 【printing rubber roller】and release the button of 【FEED】, save the setting values of the parameters and exit. Enter into the normal working mode.

If the printer's power supply is closed directly, the setting parameters will lose.

2.10 Printing mode setting

In shut-down mode, open the printer head, press the 【FEED】button and turn on the power switch, let go of the 【FEED】button after seeing the status indicator and paper out indicator flashing alternately. Then press【FEED】buttons for 3 times, and close up the printer head. Keep doing the same to choose other mode.

2.11 Restore default parameters

In shut-down mode, open the printer head, press the 【FEED】button and turn on the power switch, let go of the 【FEED】button after seeing the status indicator and paper out indicator flashing alternately. Then press 【FEED】buttons for 4 times，and close up the printer head. The printer will restore default parameters and automatically reboot.

2.12 Printer upgrade

2.12.1 Upgrade firmware under holding.

the printer standby state, use the upgrade tool ‘UpdateFirmware.exe’ on the PC to perform firmware upgrade.

1) . Upgrade by using USB port

When using a USB port to upgrade, select the USB option in the port bar and open the port for upgrading

2) .Upgrade by using COM port

When using COM port to upgrade, select the corresponding COM port in the port bar, and select the corresponding baud rate, check bit, stop bit, data bit, flow control etc. to open the port for upgrade. Self - check page will show the corresponding information of this COM port, available for reference

Upgrade instructions:

1. In the standby state, select the port supported by the printer on the communication setting bar, and then click.
2. In the Firmware File field, select the firmware file you want to download to the printer.
3. Finally click the Start Upgrade button.

After the printer upgrade firmware is completed, print the self-test test page i

2.12.2 Upgrade firmware in boot.

When upgrade firmware in Boot, set the printer into Boot mode, as follows: In the shutdown state, first open the【Printer head】, press and hold the【FEED】key, and then turn on the power switch. Release the【FEED】key within 300ms, and the PAPER OUT indicator light of the printer will flash. At this time, the printer has entered the standby state of Boot operation mode, please refer to 2.11.1 for firmware upgrade.

When boot operation Mode is In standby state, turn off the printer power to exit Boot operation mode directly.

2.13 Label calibration in label mode

1. Calibration: in the label mode while the printer does not report errors in the standby state, press the【FEED】key for more than 4 seconds, release the 【FEED】key, then printer enters the calibration state. After the calibration is completed, the printer automatically goes to the gap part between label paper.

2.Label size (One piece of label paper is rectangular or nearly rectangular), it does not support irregular shaped labels

2.14 Installation and use notes

1.The connection between the paper exit and the paper exit position of the device suggested to be one of the following figures.

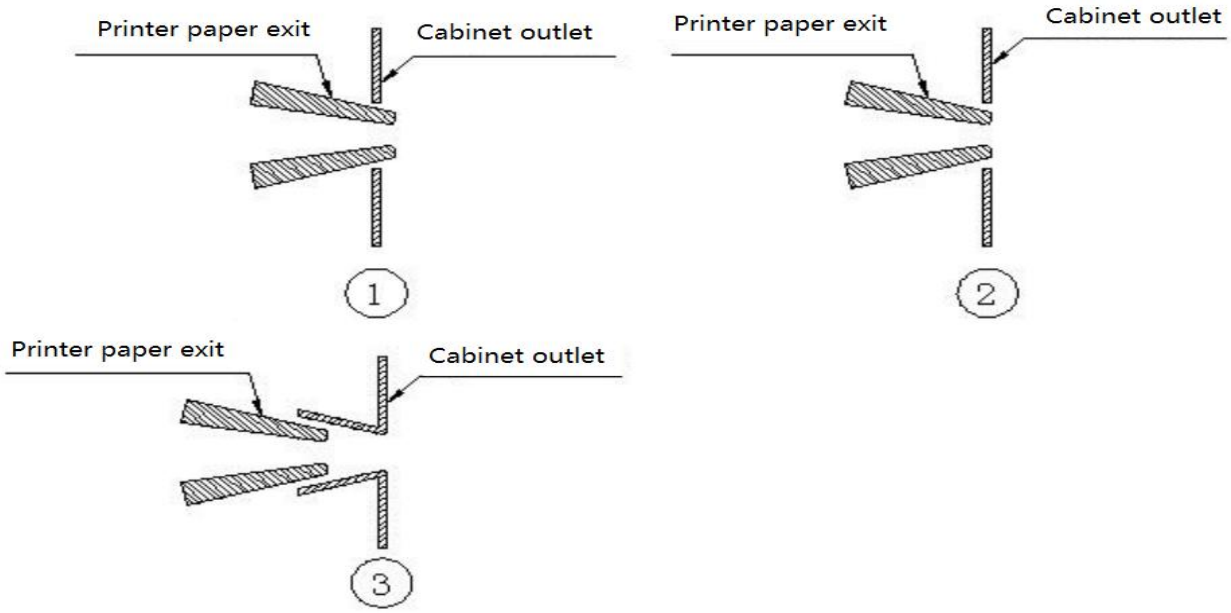

2. When the paper exit port and Cabinet outlet are connected in the above figure, in the structure of Figure 1 and Figure 2, there should be a gap between the paper exit of the printer and the paper exit of the device. See the figure below.

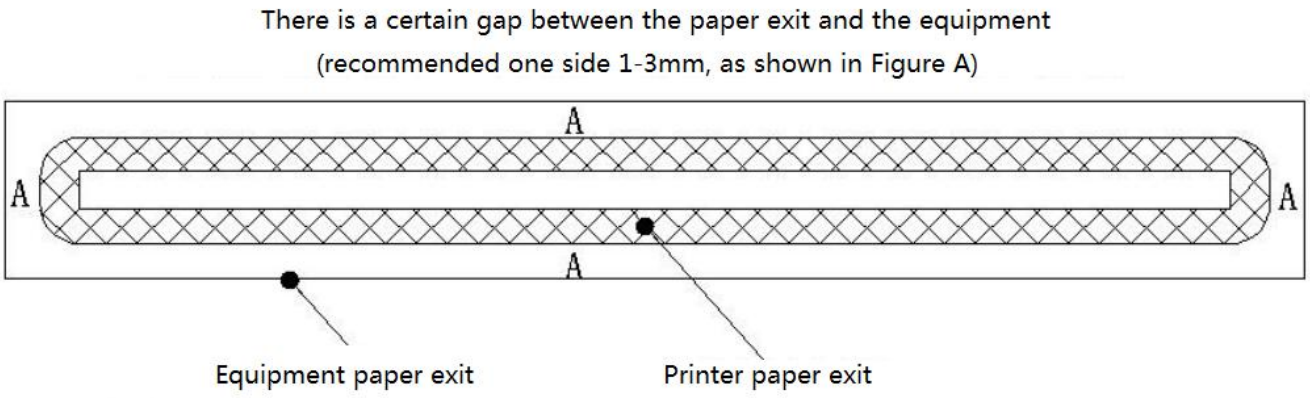

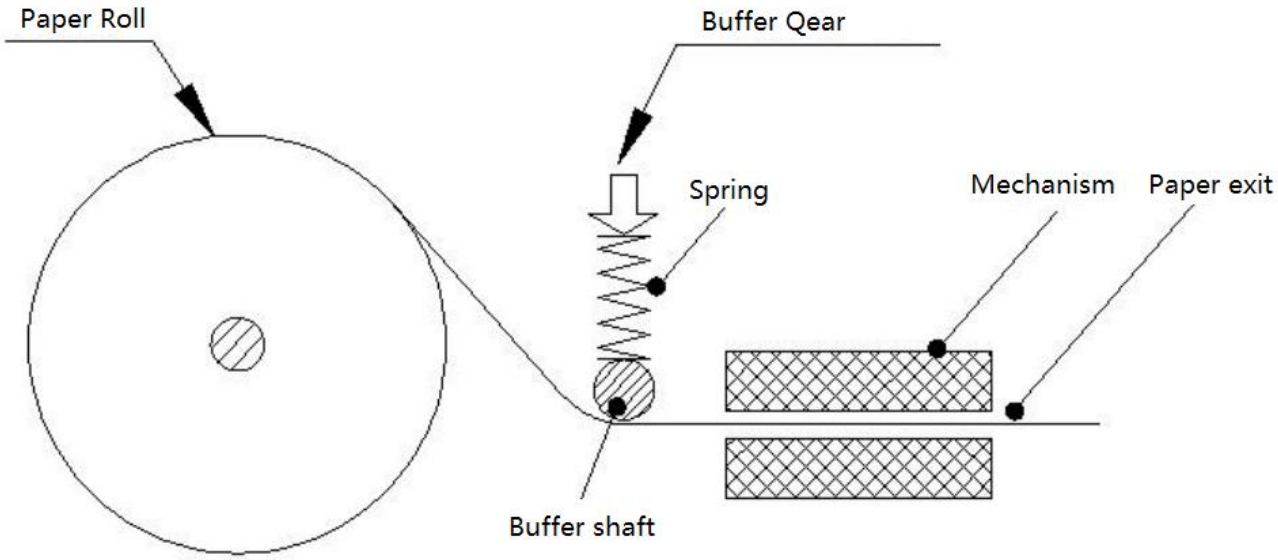

3.The printer must be firmly installed to prevent the printer from shifting due to external force and causing paper blockage.If installed on the sliding rail, it is necessary to make the sliding rail limit mechanism.

4.In the process of use, it is necessary to wait for the printer to finish cutting paper before tearing/taking paper, so as to avoid paper blocking and deviation caused by paper tearing.
5.In the process of use, do not cover the paper nozzle with your hands, and make sure there is no foreign body covering before the paper nozzle to avoid paper jam.
6.Ensure the paper head is flat and free from debris when loading the paper, so as to avoid slanting the paper or getting stuck in the machine head.
7.the printer is not suitable for working in the vibration environment, if you use the vibration environment, you must add damping design.
8.Printer in dust, oil, moisture, high temperature and other harsh environments, must do effective protection measures, so as not to affect the normal use of the printer.

Chapter 3 Other information

3.1 Instruction programming manual

SP-EU804(5) Commands Manual is a technical manual to assist users to explore printer applications. The manual can be obtained from our company.

3.2 Description of black mark pre-printing

If consumer uses a pre-printed black mark for ticket positioning, the following black mark pre-printing specifications must be observed when printing the black mark,, otherwise the printer may not recognize the black mark. black mark pre-printing specification:

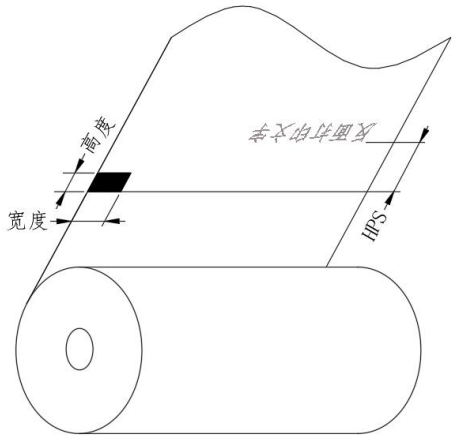

Printing position: As shown in the figure above, the black mark should be printed on the right edge of the non-print surface (only the black mark on the non-print text surface of the printing paper is supported).

Width range： Height≥12mm(when using 80mm black mark paper)

Height range: 4mm≤Height≤6mm

Reflectance to infrared light: <10% (the reflectance of the rest of the paper's black mark width to infrared light >65%)

HPS: HPS is the distance between the edge of the black mark on the printer and the upper edge at the start of printing. 4.5mm≤HPS≤ 6.5 mm

3.3 Label paper description

If consumer uses self-adhesive label paper, be sure to comply with the following specifications, otherwise the printer may not be able to correctly position the gap between label papers, resulting in order receipt skipping or missing. Specification for label paper:

1. Label cannot longer than 200mm;
2. Gap between two label papers is around 2-3mm;
3. Label size (One piece of label paper is rectangular or nearly rectangular), it does not support irregular shaped labels
4. The diameter of paper roll shaft of label paper cannot less than 25mm.

Appendix A: Parameters setting

This appendix shows the way, through which printer’s parameters are sett through the button.

Setup instruction: use the button of【printing rubber roller】 to choose the setting items, change the item by press the button【printing rubber roller】, and print out the current value. Use the button of【FEED】to set the parameter, the parameter will be changed by press the【FEED】button.

Full setting:

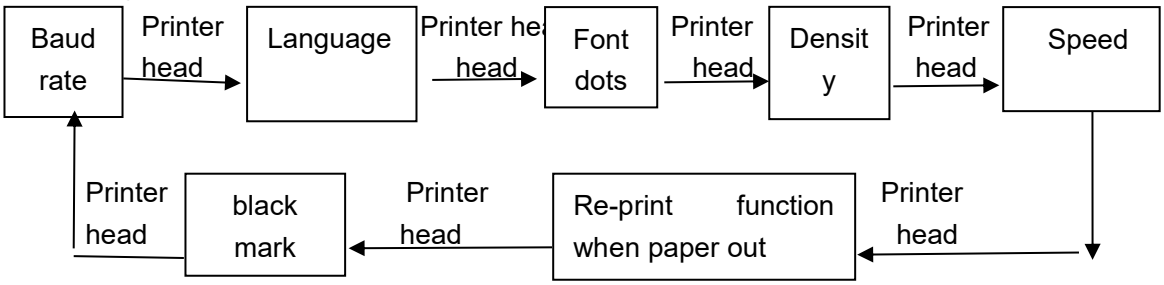

Baud rate:

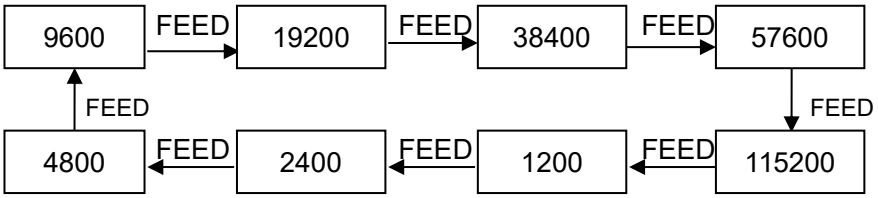

Language:

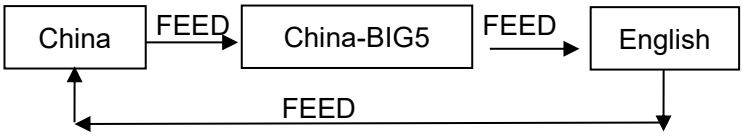

Font dots:

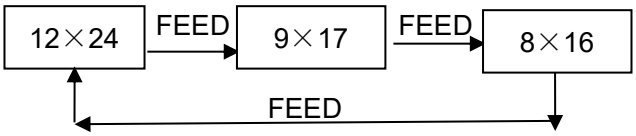

Print density:

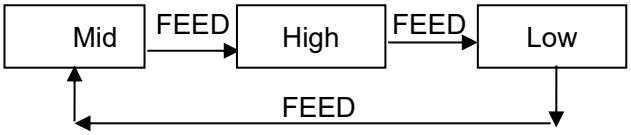

Print speed:

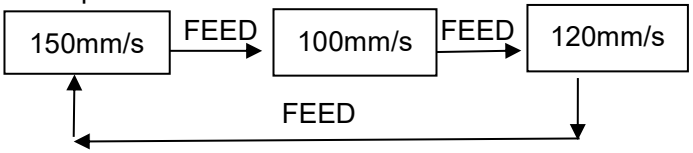

Re-printing after paper refilling :

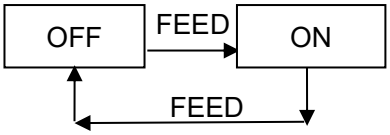

Normal paple mode and black mark mode:

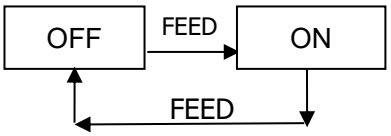

The manufacturer has the right to modify the contents of this instructions without prior notice!

Beijing Sprinter Technology development CO. LTD.
Address：4F, #3Building, No.1YUAN, No.26, 4th Ave.Chuangye Minddle Road, Shangdi information industry park, Haidian District, Beijing
Postcode：100085
TELE：010-51661178
FAX：010-51661178-190