HPSI



Huaxin Power Systems International Co., Ltd.

WhatsApp:+86 18710852325/+86 13152134919/+86 18892055643

Tel:18629645674

Mail:admin@hpsigenerator.com

Web:https://www.hpsigenerator.com

Add: Shengyuan Plaza, Daming Palace, Xi'an City, Shaanxi Province, P.R.China.

Huaxin Power Systems International Co., Ltd.

The manufacturer providing global customers with one-stop power solutions and customized supporting services



Company Development History

Founded in Xi'an, Shaanxi Province – the starting point of the ancient Silk Road, the company has always regarded quality as its core corporate value since its establishment. Adhering to its original aspiration of quality and deeply rooted in the industry, we have won high recognition and trust from numerous customers at home and abroad with our excellent product quality and professional service standards. Rising rapidly in the regional industry, the company has gradually grown into a highly influential leading enterprise.

Faced with the new situation of an increasingly saturated domestic market and intensifying industry competition, the company has taken the initiative to seize development opportunities, actively adapt to market changes, and resolutely expanded into the field of international trade. By continuously optimizing the internal management mechanism, upgrading the product system and technical capabilities, integrating its own core production resources, and steadily enhancing overall competitiveness, the company has successfully provided global customers with one-stop and comprehensive power solutions, steadily advancing toward internationalization and high-quality development.

Contents

Company Profile P01

Quality Policy P02

Service Network P03

Production Strength P05

Typical Cases P06

Company Products P07

Product Specification Sheet P23



About Huaxin

CE TÜV CCS ISO9001 ISO14000 ISO18000 c UL us Intertek

Company Profile

Huaxin Power Systems International Co., Ltd. is the foreign trade subsidiary of Shaanxi Huaxin Power Equipment Co., Ltd.Leveraging the group's full industrial chain advantages and independently controllable supply chain, we integrate production resources from four core manufacturing bases to provide global customers with one-stop power solutions and customized supporting services.

The company has established a full-process layout covering R&D and production of generator core components, as well as final production, testing, and sales of complete generator sets. Our core products include diesel and natural gas generator sets, along with various water pump units. Generator sets are available in multiple configurations: open-type, soundproof, container-type, trailer-type, and vehicle-mounted, with a single-unit power range from 5kW to 3000kW. This power range meets the construction requirements for system integration of various temporary or long-term power stations, particularly delivering specialized power solutions for industries such as data centers. Our products are widely applied in diverse scenarios including industrial and mining, real estate, telecommunications, and overseas projects.

Benefiting from our integrated self-production and direct sales model, we own dozens of patented technologies. Our products fully meet international quality standards, ensuring stable delivery schedules and comprehensive after-sales support. Our business extends to major global markets including Southeast Asia, the Middle East, Africa, South America, and Europe.

Quality Policy





Patent Certificate

Cooperative Brand

NEWAGE AVK SEG · Cummins · DEUTZ · MITSUBISHI · Perkins · MARATHON ELECTRIC

LEROY-SOMER · mecc alte · mtu · WEICHAI · STAMFORD | AvK · ComAp

Service Network

We have established a professional power distribution network across 128 countries worldwide. By partnering with globally renowned engine brands, we have built a comprehensive sales and service support system covering the entire market.Whether you require product consultation, procurement of genuine original parts, application of cutting-edge technologies, or full-process services covering pre-sales, in-sales and after-sales support, we will provide professional protection to ensure your generator sets operate efficiently and stably at all times.

Tips

- UK
- HongKong
- Saudi
- German
- Beijing
- ChengDu
- WuHan
- XiAn
- XiaMen
- FuZhou

To find more about our service and support for your business,visit https://www.hpsigenerator.com



Production Strength

The company is equipped with advanced digital production lines and high-end testing equipment, including one national-level high-precision testing center and more than 60 sets of high-end professional production equipment.In addition, the company has a professional management team and over 106 power supply experts, as well as more than 30 high-level scientific researchers. With strong comprehensive capabilities in R&D and production, its annual production capacity can reach 1.85 million kilowatts of generator sets.








Typical Cases

Relying on its advanced production capacity, professional technical team and global service network, the company's generator sets are widely used in many core fields such as data centers, healthcare, industrial manufacturing, energy infrastructure and emergency support.









COMPANY PRODUCTS



OPEN TYPE GENSET

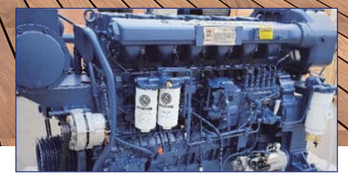

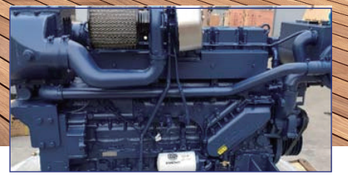



Standard Configuration

- Compact fuel tank base, specially designed for critical applications, supporting 8 hours of continuous full-load operation.
- Standard lifting lugs for convenient transportation and installation.
- Wide power range (6-3120 kVA) to meet diverse customer requirements.
- Equipped with renowned-brand engines and alternators to ensure strong and reliable power output.
- Comprehensive intelligent control system provides full unit protection, simple operation, long service life, and adaptability to various application scenarios.
- Abundant optional functions, including parallel system, heating system, high-temperature water tank, radiator, circuit breaker, muffler, etc.
- Complete operation and maintenance manual.

Reliability & Safety

- The overall design, assembly and testing are independently completed in-house, with full process control and traceability.
- Powered by world-leading engines such as Cummins, MTU, Perkins, etc., delivering stable and reliable performance.
- Global service network supported by a team of professionally factory-trained technical experts.
- Selected high-quality components from top international brands, with systematic performance and reliability as the core design principles.
- Each unit undergoes rigorous on-site testing before delivery to ensure stable operation.
- As an industry-leading generator set control system, it provides full-scenario management solutions ranging from basic simple operation modes to complex parallel/linkage control, flexibly adapting to various working conditions and application requirements.

SILENT TYPE GENSET

Standard Configuration

- Special lifting holes on the top and bottom for easy handling and transfer.
- Unique intake and exhaust piping design effectively prevents dust inhalation.
- Perfectly symmetrical layout of air intake and exhaust systems ensures stable system operation.
- Double-layer large-capacity fuel tank enables the generator set to run continuously at full load for 12 to 24 hours with no risk of leakage.
- Integrated design of IP65 control box and distribution box.
- International standard plug connectors and external terminals ensure fast and convenient operation, complying with international standards and specifications.
- Each machine undergoes strict factory testing to guarantee excellent and stable performance.

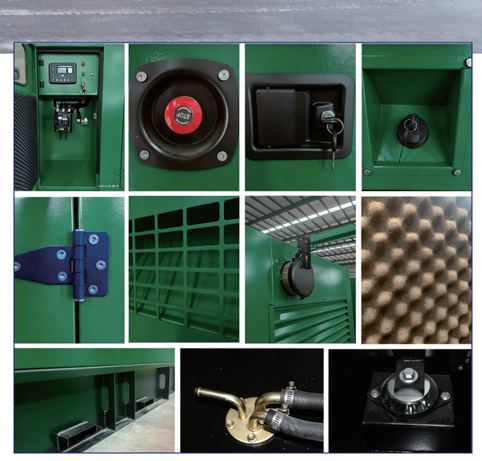

Key Components

Control panel, base fuel tank, fuel filler, door lock, emergency stop button, cable outlet, drain outlet, high-strength hinges, waterproof rubber strips, high-efficiency flame-retardant sound-absorbing cotton, outdoor fully plastic-sprayed enclosure.

Optional Accessories

CLarge-capacity base fuel tank, bottom forklift holes, ultra-silent design, optional enclosure colors.

TRAILER TYPE GENSET









Standard Configuration

- The whole unit is elaborately manufactured with high-strength heavy-duty steel and adopts a double-layer powder coating protection process, featuring superior corrosion resistance and excellent durability, suitable for long-term stable operation under various harsh working conditions.
- Equipped with extra-large hatches to ensure barrier-free daily operation and troubleshooting of the generator set.
- The interior of the enclosure is fitted with a detachable duct system and a dedicated maintenance passage, making internal component inspection and repair more convenient.
- Lubricating oil and coolant can be directly drained to the base frame through special pipelines, with a dedicated oil collection port on the outside of the enclosure to avoid leakage and pollution and facilitate cleaning.
- The unit is standardly equipped with special lifting holes for one-step equipment transfer and on-site installation.
- Detachable base support legs are optional to ensure stable forklift handling.

Reliability & Safety

- Adopts a fully enclosed exhaust silencing system to effectively isolate exhaust risks and ensure the personal safety of operators.
- Configured with an adequate ventilation system that precisely meets the cooling air demand during generator operation, preventing equipment damage caused by overheating.
- Uses high-quality fireproof and heat-radiation resistant materials to efficiently achieve dual effects of heat absorption and thermal insulation, eliminating potential high-temperature safety hazards.
- Specially designed special anti-vibration pads can effectively isolate vibration generated during generator operation, prevent vibration transmission to the equipment enclosure, protect the body structure and reduce operating noise.

CONTAINERISED GENERATOR SET









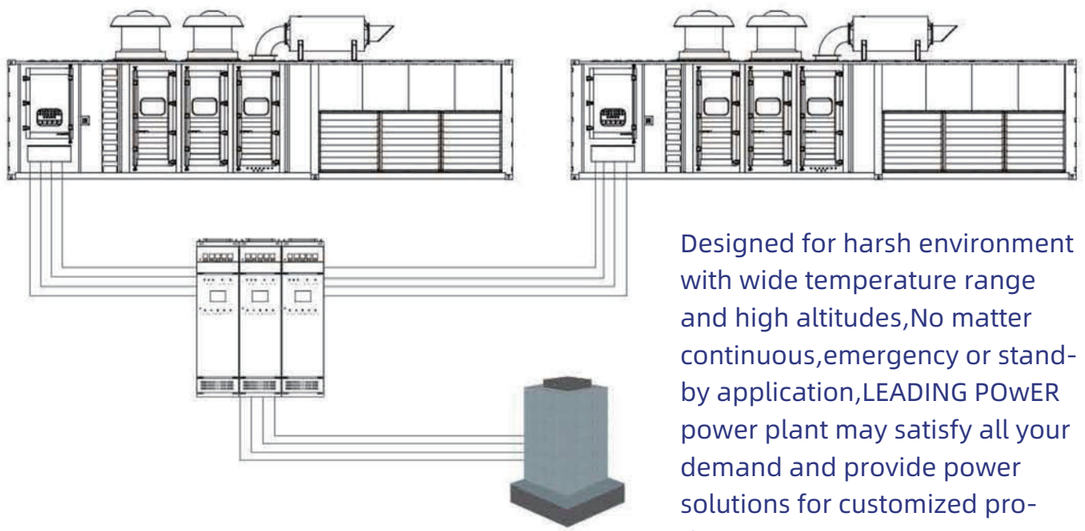

Designed for harsh environment with wide temperature range and high altitudes,No matter continuous,emergency or stand-by application,LEADING POwER power plant may satisfy all your demand and provide power solutions for customized pro-duce

Standard Configuration

- ISO standard 20ft, 30ft, 40ft and 40HQ containers with Chinese COC certification.
- Easy maintenance with access doors on both sides.
- High-corrosion protection container coating.
- Integrated radiator or split-type radiator available according to design.
- High-flow quick-fill cooling fan.
- Automatic fuel filling system.
- External fuel connection port.
- Heavy-duty fuel filter with water separator.
- Integrated AC and DC lighting system.
- Multiple cable entry points.
- Full-weight lifting capacity via corner castings.

High voltage options:50Hz: 3.3kV, 6.3kV, 11kV, etc.
60Hz: 4.16kV, 6.6kV, 13.8kV, etc.

Full Range Multi Finction Protection System


DSE6120


DSE7320


DSE8610


IL-NT AMF20


IC-NT SPtM


IC-NT MINT


IG-NT-GC

Model	DSE6120	DSE7320	DSE8610	IL-NT AMF20	IC-NT SPtM	IC-NT MINT	IG-NT-GC
Brand	DEEP SEA	DEEP SEA	DEEP SEA	ComAp	ComAp	ComAp	ComAp
Application	AMF+ATS	AMF+ATS	Parallel Control/ Grid connection	AMF+ATS	Grid Connection	Parallel control	Parallel Cont Grid connect
Language	Icons	Multiple Languages					rol/ ion
Timer	●	●	●	●	●	●	●
Communication Port	USB	RS232/485 USB	RS232/485 USB	Optional RS232	RS232	RS232	RS232/48 5
Custom inputs/outputs	6/4	8/6	11/8	7/7	9/8	9/8	12/12
AMF	●	●	Auto Start	●	Auto Start	Auto Start	Auto Star t
ECU	USB	●	●	N/A	●	●	●
Mains display	4/4	●	●	●	●	●	●
Alternator parameter	●	●	●	●	●	●	●
Engine parameter	●	●	●	●	●	●	●
Battery voltage	●	●	●	●	●	●	●
Fuel level display	●	●	●	●	●	●	●
Over-speed protection	●	●	●	●	●	●	●
Over-temperature protection	●	●	●	●	●	●	●
Low-oil protection	●	●	●	●	●	●	●
Over-current protection	●	●	●	●	●	●	●
Idle control	●	●	●	●	●	●	●
PLC programme	●	●	●	●	●	●	●
Event log	N/A	●	●	N/A	N/A	N/A	●
	50 events	250 events	250 events	200 events	200 events	200 events	500 event s

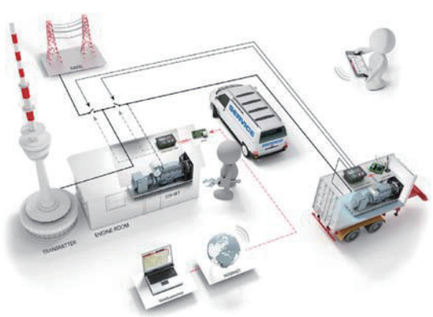





Auromatic Transmiddion Switch(ATS)

Function: Automatic switching between mains power and emergency power supply without manual operation.
Working Principle: When the mains power fails or the voltage drops below the normal level, the ATS will automatically start the emergency generator set, and switch the power supply of the load from mains power to the generator set.
When the mains power returns to normal, the ATS will automatically switch the load power back from the generator set to the mains power, and then the generator set will stop running.



Raralelling Control Cabinet

- Manual / semi-automatic / fully automatic parallel operation for two or more generator sets, enabling multiple units to form a parallel power grid for more reliable power supply.
- Centralized control and automatic load distribution make routine maintenance and repair more convenient.
- More economical, helping users reduce operating costs.
- Greater flexibility for future expansion. Additional equipment can be added at any time to meet growing load demands.







High Voltage Control Cabinet

- Main switch is motor-operated, pre-charged energy storage, draw-out type vacuum circuit breaker.It can be closed manually, shunt-tripped manually, and also closed electrically.
- Overcurrent protection；Zero-phase earth leakage protection；Overvoltage protection；Reactive power failure protection for generator excitation system.
- Voltage, frequency and three-phase current indication
- Generator closing, generator tripping, service position and test position indication
- LED function and fault indication



Professional Manufacturer of Diesel Engine Water Pumps
Customization Available for Various Applications



Handle all scenarios with ease



Flood control and waterlogging drainage



Firefighting water



Farmland irrigation



Sewage treatment

Diesel Engine Water Pumps





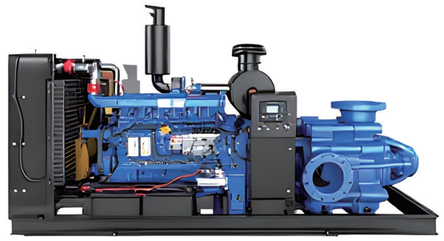







Every detail of our company's products embodies the concept of maximum energy saving and high efficiency. We provide enterprises with comprehensive technical support and 24-hour after-sales service. Configurations and solutions can be customized according to customer needs to ensure efficient, safe and durable operation of the pumps and supporting systems.













Strong production strength ensuressufficient and timely supply



Open-frame diesel generator



Silent diesel generator



Diesel Water Pump



High-pressure diesel water pump



Gasoline Generator



Gasoline Water Pump

Product Specification Sheet

50 Hz | 3P 4W | 400 V | Pf 0.8

GENERATING SETS POWERED BY CUMMINS ENGINE										
Genset Model		Prime Power		Standby Power		Engine Model	NO.of Cylinder	Displac-ement	Rated Fuel Consum-ption@100%Load	Lub Oil Capacity
Open Type	Silent Type	kW	kVA	kW	kVA			L	L/h	L
HPSI-O28C	HPSI-28C	20	25	22	27.5	4B3.9-G1/G2	4	3.9	7.1/6.7	10.9
HPSI-O42C	HPSI-42C	30	37.5	33	42	4BT3.9-G1/G2	4	3.9	10/9.3	10.9
HPSI-O63C	HPSI-63C	45	56	50	63	4BTA3.9-G2	4	3.9	12.9	10.9
HPSI-O88C	HPSI-88C	64	80	70	88	4BTA3.9-G11	4	3.9	17.6	10.9
HPSI-O94C	HPSI-94C	68	85	75	94	6BT5.9-G1	6	5.9	18.5	16.4
HPSI-O110C	HPSI-110C	80	100	88	110	6BT5.9-G2	6	5.9	21.7	16.4
HPSI-O125C	HPSI-125C	91	114	100	125	6BTA5.9-G2	6	5.9	27	16.4
HPSI-O143C	HPSI-143C	104	130	114	143	6BTAA5.9-G2	6	5.9	30	16.4
HPSI-O170C	HPSI-170C	124	155	136	170	6BTAA5.9-G12	6	5.9	34	16.4
HPSI-O200C	HPSI-200C	144	180	158	200	6CTA8.3-G2	6	8.3	42	27.6
HPSI-O220C	HPSI-220C	160	200	176	220	6CTAA8.3-G2	6	8.3	45	23.8
HPSI-O275C	HPSI-275C	200	250	220	275	6LTAA8.9-G2	6	8.9	53	27.6
HPSI-O275C	HPSI-275C	200	250	220	275	MTA11-G2	6	10.8	51.6	36.7
HPSI-O275C	HPSI-275C	200	250	220	275	NT855-GA	6	14	53.4	38.6
HPSI-O313C	HPSI-313C	220	275	250	313	NTA855-G1A	6	14	61.3	38.6
HPSI-O350C	HPSI-350C	250	313	280	350	MTAA11-G3	6	10.8	61	36.7
HPSI-O350CI	HPSI-350CI	250	313	280	350	NTA855-G1B	6	14	71.4	38.6
HPSI-O375C	HPSI-375C	280	350	300	375	NTA855-G2A	6	14	71.9	38.6
HPSI-O412C	HPSI-412C	300	375	330	412	NTAA855-G7	6	14	85.4	38.6
HPSI-O450C	HPSI-450C	N/A	N/A	360	450	NTAA855-G7A	6	14	89.2	38.6
HPSI-O500C	HPSI-500C	360	450	400	500	KTA19-G3	6	19	96	50
HPSI-O500CI	HPSI-500CI	360	450	400	500	6ZTAA13-G4	6	13	91.4	45.42
HPSI-O550C	HPSI-550C	400	500	440	550	KTA19-G4 / KTA19-G3A	6	19	107	50
HPSI-O550CI	HPSI-550CI	400	500	440	550	QSZ13-G3	6	13	101	45.4
HPSI-O650C	HPSI-650C	460	575	520	650	KTAA19-G6	6	19	132	50
HPSI-O688C	HPSI-688C	N/A	N/A	550	688	KTAA19-G6A	6	19	155	50
HPSI-O788C	HPSI-788C	570	713	630	788	KTA38-G1	12	38	160	135
HPSI-O825C	HPSI-825C	600	750	660	825	KTA38-G2	12	38	167	135
HPSI-O888C	HPSI-888C	640	800	710	888	KTA38-G2B	12	38	167	135
HPSI-O1000C	HPSI-1000C	728	910	800	1000	KTA38-G2A	12	38	194	135
HPSI-O1100CI	HPSI-1100CI	800	1000	880	1100	KTA38-G5	12	38	209	135
HPSI-O1250C	HPSI-1250C	N/A	N/A	1000	1250	KTA38-G9	12	38	248	135
HPSI-O1375C	HPSI-1375C	1000	1250	1100	1375	KTA50-G3	16	50	261	176.8
HPSI-O1650C	HPSI-1650C	1100	1375	1320	1650	KTA50-G8	16	50	289	204
HPSI-O1650CI	HPSI-1650CI	1200	1500	1320	1650	KTA50-GS8	16	50	309	204.4

Specification subject to change without prior note

50 Hz | 3P 4W | 400 V | Pf 0.8

CUMMINS

TRANSPORTATION DATA							
Genset Model		Dimensions LxWxH(m)		Weight(kg)		Fuel Tank Capacity(L)	
Open Type	Silent Type	Open Type	Silent Type	Open Type	Silent Type	Open Type	Silent Type
HPSI-O28C	HPSI-28C	1.8×0.85×1.33	2.3×1.1×1.29	730	1050	95	130
HPSI-O42C	HPSI-42C	1.8×0.85×1.33	2.3×1.1×1.29	830	1120	95	130
HPSI-O63C	HPSI-63C	1.8×0.85×1.33	2.3×1.1×1.29	950	1320	135	130
HPSI-O88C	HPSI-88C	1.9×0.85×1.33	2.3×1.1×1.29	1040	1410	135	130
HPSI-O94C	HPSI-94C	2.3×0.90×1.48	2.8×1.1×1.47	1100	1550	230	280
HPSI-O110C	HPSI-110C	2.2×0.94×1.48	2.8×1.1×1.47	1150	1600	230	280
HPSI-O125C	HPSI-125C	2.2×0.94×1.48	2.8×1.1×1.47	1180	1630	230	280
HPSI-O143C	HPSI-143C	2.35×0.95×1.50	2.8×1.1×1.47	1280	1700	260	280
HPSI-O170C	HPSI-170C	2.35×0.95×1.52	2.8×1.1×1.7	1340	1800	260	280
HPSI-O200C	HPSI-200C	2.4×0.95×1.57	2.8×1.1×1.8	1650	2250	280	330
HPSI-O220C	HPSI-220C	2.55×1.0×1.57	3.0×1.2×1.8	1750	2350	310	380
HPSI-O275C	HPSI-275C	2.6×1.05×1.82	3.8×1.3×1.85	1900	2750	400	400
HPSI-O275C	HPSI-275C	3.0×1.1×1.92	4.2×1.5×2.1	2600	3700	500	770
HPSI-O275C	HPSI-275C	3.0×1.1×1.92	4.2×1.5×2.1	2900	4050	560	770
HPSI-O313C	HPSI-313C	3.0×1.1×1.92	4.2×1.5×2.1	2730	3830	560	770
HPSI-O350C	HPSI-350C	3.0×1.1×1.92	4.2×1.5×2.1	2800	3900	560	770
HPSI-O350CI	HPSI-350CI	3.0×1.1×1.92	4.2×1.5×2.1	3100	4250	560	770
HPSI-O375C	HPSI-375C	3.0×1.1×1.92	4.2×1.5×2.1	3150	4300	560	770
HPSI-O412C	HPSI-412C	3.3×1.15×1.92	4.2×1.5×2.1	3300	4450	570	770
HPSI-O450C	HPSI-450C	3.3×1.15×1.92	4.2×1.5×2.1	3350	4500	570	770
HPSI-O500C	HPSI-500C	3.5×1.345×2.11	4.8×2.1×2.275	4200	5400	680	1212
HPSI-O500CI	HPSI-500CI	3.5×1.345×2.11	4.8×2.1×2.275	4200	5400	680	1212
HPSI-O550C	HPSI-550C	3.5×1.345×2.11	4.8×2.1×2.28	4300	5500	680	1212
HPSI-O550CI	HPSI-550CI	3.5×1.345×2.11	4.8×2.1×2.28	4300	5500	680	1212
HPSI-O650C	HPSI-650C	3.7×1.75×2.27	5.1x2.1×2.5	4600	6500	680	1300
HPSI-O688C	HPSI-688C	3.7×1.75×2.27	5.1×2.1×2.5	4650	6500	680	1300
HPSI-O788C	HPSI-788C	4.4×1.85×2.38	5.8×2.25×2.58	6800	8400	N/A	1000
HPSI-O825C	HPSI-825C	4.4×1.85×2.38	5.8×2.25×2.58	6900	8500	N/A	1000
HPSI-O888C	HPSI-888C	4.4×1.85×2.38	5.8×2.25×2.58	7050	8700	N/A	1000
HPSI-O1000C	HPSI-1000C	4.4×1.85×2.38	5.8×2.25×2.58	7200	8800	N/A	1000
HPSI-O1100CI	HPSI-1100CI	4.4×1.85×2.23	5.8×2.25×2.58	7500	9000	N/A	1000
HPSI-O1250C	HPSI-1250C	4.4×1.85×2.23	20ft container	8400	13400	N/A	1000
HPSI-O1375C	HPSI-1375C	5.2×2.1×2.31	40ft container	9500	19500	N/A	2000
HPSI-O1650C	HPSI-1650C	5.4×2.1×2.31	40ft container	9700	19700	N/A	2000
HPSI-O1650CI	HPSI-1650CI	5.4×2.1×2.31	40ft container	10600	20600	N/A	2000

Remark: An optional external fuel tank can be customized as per customer's requirements

Product Specification Sheet

60 Hz | 3P 4W | 220V 440V | Pf 0.8

GENERATING SETS POWERED BY CUMMINS ENGINE										
Genset Model		Prime Power		Standby Power		Engine Model	NO.of Cylinder	Displac-ement	Rated Fuel Consum-ption@100%Load	Lub Oil Capacity
Open Type	Silent Type	kW	kVA	kW	kVA			L	L/h	L
HPSI-O35C	HPSI-35C	25	31	28	35	4B3.9G2	4	3.9	8.6	10.9
HPSI-O50C	HPSI-50C	36	45	40	50	4BT3.9G2	4	3.9	10.7	10.9
HPSI-O69C	HPSI-69C	50	62.5	55	69	4BTA3.9G2	4	3.9	15.9	10.9
HPSI-O97C	HPSI-97C	70	88	77	97	4BTA3.9-G11	4	3.9	20.1	10.9
HPSI-O120C	HPSI-120C	88	110	97	120	6BT5.9-G2	6	5.9	28.5	16.4
HPSI-O143C	HPSI-143C	104	130	114	143	6BTA5.9-G2	6	5.9	31	16.4
HPSI-O160C	HPSI-160C	116	145	128	160	6BTAA5.9-G2	6	5.9	34	16.4
HPSI-O185C	HPSI-185C	134	168	147	185	6BTAA5.9-G12	6	5.9	38	16.4
HPSI-O212C	HPSI-212C	160	200	170	212	6CTA8.3-G2	6	8.3	44	27.6
HPSI-O253C	HPSI-253C	184	230	202	253	6CTAA8.3-G2	6	8.3	49	23.8
HPSI-O275C	HPSI-275C	200	250	220	275	6LTAA8.9-G2	6	8.9	59	27.6
HPSI-O275CI	HPSI-275CI	N/A	N/A	220	275	NT855-GA	6	14	59.4	38.6
HPSI-O344C	HPSI-344C	250	312	275	344	NTA855-G1	6	14	73.4	38.6
HPSI-O385C	HPSI-385C	280	350	308	385	NTA855-G1B	6	14	80.5	38.6
HPSI-O438C	HPSI-438C	315	394	350	438	NTA855-G3	6	14	87.1	38.6
HPSI-O500C	HPSI-500C	350	438	400	500	KTA19-G2	6	19	97.6	50
HPSI-O563C	HPSI-563C	410	512.5	450	563	KTA19-G3	6	19	110.6	50
HPSI-O625C	HPSI-625C	450	563	500	625	KTA19-G4/ KTA19-G3A	6	19	120	50
HPSI-O750C	HPSI-750C	N/A	N/A	600	750	KTAA19-G6A	6	19	167	50
HPSI-O850C	HPSI-850C	620	775	680	850	KT38-G	12	38	154	135
HPSI-O1000C	HPSI-1000C	725	906	800	1000	KTA38-G2	12	38	203.5	135
HPSI-O1038C	HPSI-1038C	750	938	830	1038	KTA38-G2B	12	38	203.5	135
HPSI-O1125C	HPSI-1125C	800	1000	900	1125	KTA38-G2A	12	38	221	135
HPSI-O1250C	HPSI-1250C	900	1125	1000	1250	KTA38-G4	12	38	245	135
HPSI-O1375C	HPSI-1375C	N/A	N/A	1100	1375	KTA38-G9	12	38	267	135
HPSI-O1575C	HPSI-1575C	1100	1375	1260	1575	KTA50-G3	16	50	290	176.8
HPSI-O1875C	HPSI-1875C	1260	1575	1500	1875	KTA50 G9	16	50	330	204.4

Specification subject to change without prior note

60 Hz | 3P 4W | 220V 440V | Pf 0.8

CUMMINS

TRANSPORTATION DATA							
Genset Model		Dimensions LxWxH(m)		Weight(kg)		Fuel Tank Capacity(L)	
Open Type	Silent Type	Open Type	Silent Type	Open Type	Silent Type	Open Type	Silent Type
HPSI-O35C	HPSI-35C	1.8×0.85×1.33	2.3×1.1×1.29	730	1050	95	130
HPSI-O50C	HPSI-50C	1.8×0.85×1.33	2.3×1.1×1.29	830	1120	95	130
HPSI-O69C	HPSI-69C	1.9×0.85×1.33	2.3×1.1×1.29	930	1300	135	130
HPSI-O97C	HPSI-97C	1.9×0.85×1.33	2.3×1.1×1.29	1000	1370	135	130
HPSI-O120C	HPSI-120C	2.2×0.94×1.48	2.8×1.1×1.47	1150	1600	230	280
HPSI-O143C	HPSI-143C	2.2×0.94×1.48	2.8×1.1×1.47	1180	1630	230	280
HPSI-O160C	HPSI-160C	2.35×0.95×1.50	2.8×1.1×1.47	1280	1700	260	280
HPSI-O185C	HPSI-185C	2.35×0.95×1.52	2.8×1.1×1.70	1300	1760	260	280
HPSI-O212C	HPSI-212C	2.4×0.95×1.57	2.8×1.1×1.80	1650	2250	280	330
HPSI-O253C	HPSI-253C	2.55×1.0×1.57	3.0×1.2×1.80	1750	2350	310	380
HPSI-O275C	HPSI-275C	2.6×1.05×1.82	3.8×1.3×1.85	1950	2750	400	400
HPSI-O275CI	HPSI-275CI	3.1×1.1×1.92	4.2×1.5×2.10	2880	4030	560	770
HPSI-O344C	HPSI-344C	3.1×1.1×1.92	4.2×1.5×2.10	3050	4150	560	770
HPSI-O385C	HPSI-385C	3.1×1.1×1.92	4.2×1.5×2.10	3050	4150	560	770
HPSI-O438C	HPSI-438C	3.3×1.15×1.92	4.2×1.5×2.10	3150	4250	560	770
HPSI-O500C	HPSI-500C	3.5×1.345×2.11	4.8×2.1×2.275	4200	5400	680	1212
HPSI-O563C	HPSI-563C	3.5×1.345×2.11	4.8×2.1×2.275	4200	5400	680	1212
HPSI-O625C	HPSI-625C	3.5×1.345×2.11	4.8×2.1×2.28	4300	5500	680	1212
HPSI-O750C	HPSI-750C	3.7×1.75×2.27	5.1×2.1×2.5	4650	6500	680	1300
HPSI-O850C	HPSI-850C	4.4×1.85×2.38	5.8×2.25×2.61	6800	8400	N/A	1000
HPSI-O1000C	HPSI-1000C	4.4×1.85×2.39	5.8×2.25×2.61	6800	8400	N/A	1000
HPSI-O1038C	HPSI-1038C	4.4×1.85×2.38	5.8×2.25×2.61	7050	8700	N/A	1000
HPSI-O1125C	HPSI-1125C	4.4×1.85×2.40	5.8×2.25×2.61	6800	8400	N/A	1000
HPSI-O1250C	HPSI-1250C	4.4×1.85×2.40	5.8×2.25×2.61	6800	8400	N/A	1000
HPSI-O1375C	HPSI-1375C	4.4×2.1×2.23	20ft container	8400	13400	N/A	1000
HPSI-O1575C	HPSI-1575C	5.4×2.1×2.31	40ft container	9500	19500	N/A	2000
HPSI-O1875C	HPSI-1875C	5.4×2.1×2.31	40ft container	8400	20600	N/A	2000

Remark: An optional external fuel tank can be customized as per customer's requirements

Product Specification Sheet

50 Hz | 3P 4W | 400 V | Pf 0.8

GENERATING SETS POWERED BY PERKINS ENGINE

Genset Model		Prime Power		Standby Power		Engine Model	NO.of Cylinder	Displac-ement	Rated Fuel Consum-ption@100%Load	Lub Oil Capacity
Open Type	Silent Type	kW	kVA	kW	kVA			L	L/h	L
HPSI-O10PE	HPSI-10PE	7	9	8	10	403A-11G1	3	1.131	2.6	4.9
HPSI-O10PE	HPSI-10PE	7	9	8	10	403D-11G	3	1.131	2.6	4.9
HPSI-O14PE	HPSI-14PE	10	13	11	14	403A-15G1	3	1.496	3.67	6
HPSI-O14PE	HPSI-14PE	10	13	11	14	403D-15G	3	1.496	3.67	6
HPSI-O16PE	HPSI-16PE	12	15	13	16	403A-15G2	3	1.496	4.3	6
HPSI-O22PE	HPSI-22PE	16	20	18	22	404A-22G1	4	2.216	5.3	10.6
HPSI-O22PE	HPSI-22PE	16	20	18	22	404D-22G	4	2.216	5.3	10.6
HPSI-O30PE	HPSI-30PE	22	28	24	30	404D-22TG	4	2.216	7.1	10.6
HPSI-O33PE	HPSI-33PE	24	30	26	33	1103A-33G	3	3.3	7.2	8.3
HPSI-O50PE	HPSI-50PE	36	45	40	50	1103A-33TG1	3	3.3	7.2	8.3
HPSI-O66PE	HPSI-66PE	48	60	53	66	1103A-33TG2	3	3.3	14.6	8.3
HPSI-O71PE	HPSI-71PE	52	65	57	71	1104A-44TG1	4	4.4	14.8	8
HPSI-O88PE	HPSI-88PE	64	80	70	88	1104A-44TG2	4	4.4	18.7	8
HPSI-O88PE	HPSI-88PE	64	80	70	88	1104C-44TAG1	4	4.4	18.6	8
HPSI-O100PE	HPSI-100PE	72	90	80	100	1006TG1A	6	5.99	21.8	16.1
HPSI-O110PE	HPSI-110PE	80	100	88	110	1104C-44TAG2	4	4.4	22.6	8
HPSI-O150PE	HPSI-150DE	108	135	120	150	1106A-70TG1	6	7.01	30.28	16.5
HPSI-O158PE	HPSI-158PE	114	143	126	158	1106D-E70TAG2	6	7.01	35	16.5
HPSI-O165PE	HPSI-165PE	120	150	132	165	1106A-70TAG2	6	7.01	33.4	16.5
HPSI-O165PE	HPSI-165PE	120	150	132	165	1106D-E70TAG3	6	7.01	37.5	16.5
HPSI-O200PE	HPSI-200PE	144	180	160	200	1106A-70TAG3	6	7.01	41.6	16.5
HPSI-O200PE	HPSI-200PE	144	180	160	200	1106D-E70TAG4	6	7.01	48.3	17.5
HPSI-O220PE	HPSI-220PE	160	200	176	220	1106A-70TAG4	6	7.01	45.8	16.5
HPSI-O220PE	HPSI-220PE	160	200	176	220	1506A-E88TAG1	6	8.8	44.6	41
HPSI-O250PE	HPSI-250PE	184	230	200	250	1506A-E88TAG2	6	8.8	48.6	41
HPSI-O275PE	HPSI-275PE	200	250	220	275	1506A-E88TAG3	6	8.8	55.5	41
HPSI-O300PE	HPSI-300PE	220	275	240	300	1506A-E88TAG4	6	8.8	60.2	41
HPSI-O325PE	HPSI-325PE	236	295	260	325	1506A-E88TAG5	6	8.8	64.9	41
HPSI-O400PE	HPSI-400PE	280	350	320	400	2206C-E13TAG2	6	12.5	75	40
HPSI-O450PE	HPSI-450PE	320	400	360	450	2206C-E13TAG3	6	12.5	85	40
HPSI-O500PE	HPSI-500PE	350	438	400	500	2206A-E13TAG6	6	12.5	75	40
HPSI-O500PE	HPSI-500PE	360	450	400	500	2506C-E15TAG1	6	15.2	99	62
HPSI-O550PE	HPSI-550PE	400	500	440	550	2506C-E15TAG2	6	15.2	106	62
HPSI-O660PE	HPSI-660PE	480	600	528	660	2806C-E18TAG1A	6	18.13	129	62
HPSI-O700PE	HPSI-700PE	520	650	560	700	2806A-E18TAG2	6	18.13	132	62
HPSI-O825PE	HPSI-825PE	600	750	660	825	4006-23TAG2A	6	22.921	155	113.4
HPSI-O900PE	HPSI-900PE	640	800	720	900	4006-23TAG3A	6	22.921	172	113.4
HPSI-O1000PE	HPSI-1000PE	720	900	800	1000	4008TAG1A	8	30.561	195	153
HPSI-O1100PE	HPSI-1100PE	800	1000	880	1100	4008TAG2A	8	30.561	215	153
HPSI-O1250PE	HPSI-1250PE	900	1125	1000	1250	4008-30TAG3	8	30.561	244	153
HPSI-O1375PE	HPSI-1375PE	1000	1250	1100	1375	4012-46TWG2A	12	45.842	258	177
HPSI-O1500PE	HPSI-1500PE	1100	1375	1200	1500	4012-46TWG3A	12	45.842	281	177
HPSI-O1650PE	HPSI-1650PE	1200	1500	1320	1650	4012-46TAG2A	12	45.842	310	177
HPSI-O1875PE	HPSI-1875PE	1368	1710	1500	1875	4012-46TAG3A	12	45.842	370	177
HPSI-O2000PE	HPSI-2000PE	1480	1850	1600	2000	4016TAG1A	16	61.123	383	214
HPSI-O2250PE	HPSI-2250PE	1600	2000	1800	2250	4016TAG2A	16	61.123	434	214
HPSI-O2500PE	HPSI-2500PE	1800	2250	2000	2500	4016-61TRG3	16	61.123	470	213

Remarks: 4006-23TAG3A、4008TAG1A、4008TAG2A、4012-46TWG2A、4012-46TAG2A also made available in India

Specification subject to change without prior note

50 Hz | 3P 4W | 400 V | Pf 0.8

Perkins

TRANSPORTATION DATA

Genset Model		Origin/ Emission	Dimensions LxWxH(m)		Weight(kg)		Fuel Tank Capacity(L)	
Open Type	Silent Type		Open Type	Silent Type	Open Type	Silent Type	Open Type	Silent Type
HPSI-O10PE	HPSI-10PE	CN	1.2×0.75×1.2	1.8×1×1.18	350	750	70	115
HPSI-O10PE	HPSI-10PE	CN/Stage IIIa	1.2×0.75×1.2	1.8×1×1.18	350	750	70	115
HPSI-O14PE	HPSI-14PE	CN	1.2×0.75×1.2	1.8×1×1.18	430	780	70	115
HPSI-O14PE	HPSI-14PE	CN/Stage IIIa	1.2×0.75×1.2	1.8×1×1.18	430	780	70	115
HPSI-O16PE	HPSI-16PE	CN	1.2×0.75×1.2	1.8×1×1.18	430	780	70	115
HPSI-O22PE	HPSI-22PE	CN	1.3×0.75×1.2	1.8×1×1.18	500	880	75	115
HPSI-O22PE	HPSI-22PE	CN/Stage IIIa	1.3×0.75×1.2	1.8×1×1.18	500	880	75	115
HPSI-O30PE	HPSI-30PE	CN/Stage IIIa	1.3×0.75×1.2	1.8×1×1.18	500	880	75	115
HPSI-O33PE	HPSI-33PE	UK	1.5×0.8×1.2	2.3×1.1×1.24	700	1200	80	135
HPSI-O50PE	HPSI-50PE	UK	1.6×0.8×1.25	2.3×1.1×1.24	840	1350	115	135
HPSI-O66PE	HPSI-66PE	UK	1.7×0.8×1.25	2.3×1.1×1.24	890	1370	115	135
HPSI-O71PE	HPSI-71PE	CN	1.9×0.9×1.32	2.3×1.1×1.24	970	1460	150	135
HPSI-O88PE	HPSI-88PE	CN	1.9×0.9×1.32	2.3×1.1×1.24	1010	1500	150	135
HPSI-O88PE	HPSI-88PE	CN/Stage II	1.9×0.9×1.32	2.3×1.1×1.29	1025	1565	150	185
HPSI-O100PE	HPSI-100PE	UK	2.15×0.97×1.47	28×1.1×1.47	1220	1650	250	210
HPSI-O110PE	HPSI-110PE	CN/Stage II	1.9×0.9×1.32	2.3×1.1×1.29	1060	1500	200	185
HPSI-O150PE	HPSI-150DE	CN	2.35×0.95×1.52	2.8×1.1×1.47	1480	1880	270	210
HPSI-O158PE	HPSI-158PE	CN/Stage IIIa	2.35×0.95×1.52	2.8×1.1×1.8	1580	2060	270	300
HPSI-O165PE	HPSI-165PE	CN	2.35×0.95×1.52	2.8×1.1×1.8	1580	2060	270	300
HPSI-O165PE	HPSI-165PE	CN/Stage IIIa	2.35×0.95×1.52	2.8×1.1×1.8	1580	2060	270	300
HPSI-O200PE	HPSI-200PE	CN	2.45×0.95×1.57	2.8×1.1×1.8	1650	2220	320	330
HPSI-O200PE	HPSI-200PE	CN/Stage IIIa	2.45×0.95×1.57	2.8×1.1×1.8	1650	2220	320	330
HPSI-O220PE	HPSI-220PE	CN	2.45×0.95×1.57	2.8×1.1×1.8	1700	2270	320	330
HPSI-O220PE	HPSI-220PE	USA	2.6×1.1×1.85	3.8×1.3×2.0	2170	3240	500	500
HPSI-O250PE	HPSI-250PE	USA	2.7×1.1×1.85	3.8×1.3×2.0	2290	3360	500	500
HPSI-O275PE	HPSI-275PE	USA	2.7×1.1×1.85	3.8×1.3×2.0	2300	3380	500	500
HPSI-O300PE	HPSI-300PE	USA	2.9×1.15×1.85	4.2×1.5×2.1	2680	3790	560	770
HPSI-O325PE	HPSI-325PE	USA	2.9×1.15×1.85	4.2×1.5×2.1	2680	3790	560	770
HPSI-O400PE	HPSI-400PE	USA	3.3×1.15×2.1	4.2×1.5×2.1	3240	4350	560	770
HPSI-O450PE	HPSI-450PE	USA	3.3×1.15×2.1	4.2×1.5×2.1	3290	4400	560	770
HPSI-O500PE	HPSI-500PE	USA	3.3×1.15×2.1	4.2×1.5×2.1	3450	4500	640	770
HPSI-O500PE	HPSI-500PE	USA	3.5×1.25×2.12	4.8×1.7×2.28	3800	5500	640	1210
HPSI-O550PE	HPSI-550PE	USA	3.5×1.25×2.12	4.8×1.7×2.28	3840	5590	640	1210
HPSI-O660PE	HPSI-660PE	USA	3.5×1.25×2.12	4.8×1.7×2.28	3940	5690	640	1210
HPSI-O700PE	HPSI-700PE	USA	3.5×1.25×2.12	4.8×1.7×228	4150	5900	640	1210
HPSI-O825PE	HPSI-825PE	UK	4.1×1.75×2.21	5.8×2.25×2.5	4750	7250	N/A	1000
HPSI-O900PE	HPSI-900PE	UK	4.1×1.75×2.21	5.8×2.25×2.5	4800	7300	N/A	1000
HPSI-O1000PE	HPSI-1000PE	UK	4.7×2.05×2.3	20ft container	7590	12590	N/A	1000
HPSI-O1100PE	HPSI-1100PE	UK	4.7×2.05×2.3	20ft container	7611	12611	N/A	1000
HPSI-O1250PE	HPSI-1250PE	UK	4.9×2.1×2.4	20ft container	7750	12750	N/A	1000
HPSI-O1375PE	HPSI-1375PE	UK	5.1×2.22×2.3	40ft container	9154	19154	N/A	1500
HPSI-O1500PE	HPSI-1500PE	UK	5.1×2.22×2.32	40ft container	9154	19154	N/A	1500
HPSI-O1650PE	HPSI-1650PE	UK	5.1×2.22×2.35	40ft container	11580	21580	N/A	1500
HPSI-O1875PE	HPSI-1875PE	UK	5.1×2.22×2.4	40ft container	11580	21580	N/A	1500
HPSI-O2000PE	HPSI-2000PE	UK	6.6×2.25×2.75	40ft container	16500	26500	N/A	N/A
HPSI-O2250PE	HPSI-2250PE	UK	6.6×2.25×2.75	40ft container	16500	26500	N/A	N/A
HPSI-O2500PE	HPSI-2500PE	UK	6.9×2.25×2.75	40ft container	17500	27500	N/A	N/A

Remarks. 4006-23TAG3A、4008TAG1A、4008TAG2A、4012-46TWG2A、4012-46TAG2A also made available in India

Remark: An optional external fuel tank can be customized as per customer's requirements

Product Specification Sheet

60 Hz | 3P 4W | 220V 440V | Pf 0.8

GENERATING SETS POWERED BY PERKINS ENGINE

Genset Model		Prime Power		Standby Power		Engine Model	NO.of Cylinder	Displac-ement	Rated Fuel Consum-ption@100%Load	Lub Oil Capacity
Open Type	Silent Type	kW	kVA	kW	kVA			L	L/h	L
HPSI-O12PE	HPSI-12PE	9	11	10	12	403D-11G	3	1.131	3	4.9
HPSI-O17PE	HPSI-17PE	13	16	14	17	403D-15G	3	1.496	4.3	6
HPSI-O27PE	HPSI-27PE	19	24	21	27	404D-22G	4	2.216	6.2	10.6
HPSI-O36PE	HPSI-36PE	26	33	29	36	404D-22TG	4	2.216	8.3	10.6
HPSI-O39PE	HPSI-39PE	28	35	31	39	1103A-33G	3	3.3	8.6	8.3
HPSI-O55PE	HPSI-55PE	40	50	44	55	1103A-33TG1	3	3.3	12.9	8.3
HPSI-O75PE	HPSI-75PE	54	68	60	75	1103A-33TG2	3	3.3	16.6	8.3
HPSI-O83PE	HPSI -83PE	60	75	66	83	1104A-44TG1	4	4.4	17.8	8
HPSI-O100PE	HPSI-100PE	72	90	80	100	1104C-44TAG1	4	4.4	22	8
HPSI-O125PE	HPSI-125PE	90	113	100	125	1104C-44TAG2	4	4.4	26.9	8
HPSI-O179PE	HPSI-179PE	134	168	143	179	1106D-E70TAG2	6	7.01	39.7	16.5
HPSI-O191PE	HPSI-191PE	136	170	153	191	1106D-E70TAG3	6	7.01	42.3	16.5
HPSI-O219PE	HPSI-219PE	160	200	175	219	1106D-E70TAG4	6	7.01	48.3	17.5
HPSI-O250PE	HPSI-250PE	180	225	200	250	1106D-E70TAG5	6	7.01	54.4	17.5
HPSI-O269PE	HPSI-269PE	196	245	215	269	1506A-E88TAG1	6	8.8	54.2	41
HPSI-O313PE	HPSI-313PE	225	281	250	313	1506A-E88TAG3	6	8.8	63.1	41
HPSI-O344PE	HPSI-344PE	250	313	275	344	1506A-E88TAG4	6	8.8	63.1	41
HPSI-O375PE	HPSI-375PE	270	338	300	375	1506A-E88TAG5	6	8.8	77.1	41
HPSI-O438PE	HPSI-438PE	315	394	350	438	2206C-E13TAG2	6	12.5	84	40
HPSI-O500PE	HPSI-500PE	350	438	400	500	2206A-E13TAG6	6	12.5	91	40
HPSI-O550PE	HPSI-550PE	400	500	440	550	2506C-E15TAG1	6	15	100	62
HPSI-O625PE	HPSI-625PE	455	569	500	625	2506C-E15TAG3	6	15.2	121	60
HPSI-O688PE	HPSI-688PE	500	625	550	688	2806A-E18TAG2	6	18.13	127	62
HPSI-O825PE	HPSI-825PE	600	750	660	825	4006-23TAG2A	6	22.921	176	113.4
HPSI-O1100PE	HPSI-1100PE	800	1000	880	1100	4008-TAG2A	8	30.561	215	153
HPSI-O1375PE	HPSI-1375PE	1000	1250	1100	1375	4012-46TWG2A	12	45.842	266	177
HPSI-O1650PE	HPSI-1650PE	1200	1500	1320	1650	4012-46TAG2A	12	45.842	319	177
Remarks: 4006-23TAG3A、4008TAG1A、4008TAG2A、4012-46TWG2A、4012-46TAG2A also made available in India										

Specification subject to change without prior note

60 Hz | 3P 4W | 220V 440V | Pf 0.8

Perkins

TRANSPORTATION DATA

Genset Model		Origin/ Emission	Dimensions LxWxH(m)		Weight(kg)		Fuel Tank Capacity(L)	
Open Type	Silent Type		Open Type	Silent Type	Open Type	Silent Type	Open Type	Silent Type
HPSI-O12PE	HPSI-12PE	CN/Stage IIIa	1.2×0.75×1.2	1.8×1×1.18	350	750	70	115
HPSI-O17PE	HPSI-17PE	CN/Stage IIIa	1.2×0.75×1.2	1.8×1×1.18	430	800	70	115
HPSI-O27PE	HPSI-27PE	CN/Stage IIIa	1.2×0.75×1.2	1.8×1×1.18	500	880	75	115
HPSI-O36PE	HPSI-36PE	CN/Stage IIIa	1.2×0.75×1.2	1.8×1×1.18	500	880	75	115
HPSI-O39PE	HPSI-39PE	UK	1.5×0.8×1.2	2.3×1.1×1.24	700	1200	80	135
HPSI-O55PE	HPSI-55PE	UK	1.6×0.8×1.25	2.3×1.1×1.24	800	1310	115	135
HPSI-O75PE	HPSI-75PE	UK	1.7×0.8×1.25	2.3×1.1×1.24	890	1370	115	135
HPSI-O83PE	HPSI-83PE	CN	1.9×0.9×1.32	2.3×1.1×1.24	970	1460	150	135
HPSI-O100PE	HPSI-100PE	CN/Stage II	1.9×0.9×1.32	2.3×1.1×1.29	1025	1450	150	185
HPSI-O125PE	HPSI-125PE	CN/Stage II	1.9×0.9×1.32	2.3×1.1×1.29	1060	1500	150	185
HPSI-O179PE	HPSI-179PE	CN/Stage IIIa	2.35×0.95×1.52	2.8×1.1×1.8	1540	2020	270	300
HPSI-O191PE	HPSI-191PE	CN/Stage IIIa	2.35×0.95×1.52	2.8×1.1×1.8	1580	2060	270	300
HPSI-O219PE	HPSI-219PE	CN/Stage IIIa	2.45×0.95×1.57	2.8×1.1×1.8	1650	2220	320	330
HPSI-O250PE	HPSI-250PE	CN/Stage IIIa	2.45×0.95×1.57	2.8×1.1×1.8	1650	2220	320	330
HPSI-O269PE	HPSI-269PE	USA	2.6×1.1×1.85	3.8×1.3×2.0	2170	3240	500	500
HPSI-O313PE	HPSI-313PE	USA	2.7×1.1×1.85	3.8×1.3×2.0	2290	3360	500	500
HPSI-O344PE	HPSI-344PE	USA	2.9×1.15×1.85	4.2×1.5×2.1	2680	3790	560	770
HPSI-O375PE	HPSI-375PE	USA	2.9×1.15×1.85	4.2×1.5×2.1	2680	3790	560	770
HPSI-O438PE	HPSI-438PE	USA	3.3×1.15×2.1	4.2×1.5×2.1	3190	4300	560	770
HPSI-O500PE	HPSI-500PE	USA	3.3×1.15×2.1	4.2×1.5×2.1	3240	4350	560	770
HPSI-O550PE	HPSI-550PE	USA	3.3×1.15×2.1	4.8×1.7×2.28	3750	5100	780	1212
HPSI-O625PE	HPSI-625PE	CN/Stage II	3.3×1.15×2.1	4.8×1.7×2.28	4050	5250	780	1212
HPSI-O688PE	HPSI-688PE	USA	3.7×1.35×2.2	4.8×1.7×2.28	4200	5500	780	1212
HPSI-O825PE	HPSI-825PE	UK	4.1×1.75×2.21	5.8×2.25×2.5	4800	6600	N/A	1000
HPSI-O1100PE	HPSI-1100PE	UK	4.3×1.75×2.21	5.8×2.25×2.5	5000	7600	N/A	1000
HPSI-O1375PE	HPSI-1375PE	UK	5.1×2.22×2.35	40ft container	11580	21580	N/A	1500
HPSI-O1650PE	HPSI-1650PE	UK	5.1×2.22×2.35	40ft container	11580	21580	N/A	1500
Remarks. 4006-23TAG3A、4008TAG1A、4008TAG2A、4012-46TWG2A、4012-46TAG2A also made available in India								

Remark: An optional external fuel tank can be customized as per customer's requirements

Product Specification Sheet

50 Hz | 3P 4W | 400 V | Pf 0.8

GENERATING SETS POWERED BY MTU ENGINE

Genset Model		Prime Power		Standby Power		Engine Model	NO.of Cylinder	Displac-ement	Rated Fuel Consum-ption@100%Load	Lub Oil Capacity
Open Type	Silent Type	kW	kVA	kW	kVA			L	L/h	L
HPSI-O300MTU	HPSI-300MTU	220	275	240	300	6R1600G10F/70F	6	10.5	58	46
HPSI-O330MTU	HPSI-330MTU	240	300	264	330	6R1600G20F/80F	6	10.5	63	46
HPSI-O400MTU	HPSI-400MTU	288	360	320	400	8V1600G10F/70F	8V	14	81	46
HPSI-O450MTU	HPSI-450MTU	320	400	360	450	8V1600G20F/80F	8V	14	82	46
HPSI-O500MTU	HPSI-500MTU	360	450	400	500	10V1600G10F/70F	10V	17.5	92	60.5
HPSI-O550MTU	HPSI-550MTU	400	500	440	550	10V1600G20F/80F	10V	17.5	100	60.5
HPSI-O660MTU	HPSI-660MTU	480	600	528	660	12V1600G10F/70F	12V	21	119	72.5
HPSI-O725MTU	HPSI-725MTU	528	660	580	725	12V1600G20F/80F	12V	21	130	72.5
HPSI-O725MTU	HPSI-725MTU	528	660	580	725	12V2000G25	12V	23.88	139	77
HPSI-O850MTU	HPSI-850MTU	632	790	680	850	12V2000G65	12V	23.88	165	77
HPSI-O1000MTU	HPSI-1000MTU	720	900	800	1000	16V2000G25	16V	31.84	189	102
HPSI-O1100MTU	HPSI-1100MTU	800	1000	880	1100	16V2000G65	16V	31.84	207	102
HPSI-O1230MTU	HPSI-1230MTU	904	1130	984	1230	18V2000G65	18V	35.82	238	130
HPSI-O1375MTU	HPSI-1375MTU	1000	1250	1100	1375	18V2000G26F/76F	18V	40.2	245	122
HPSI-O1705MTU	HPSI-1705MTU	1240	1550	1364	1705	12V4000G23	12V	57.2	316	260
HPSI-O1830MTU	HPSI-1830MTU	1320	1650	1464	1830	12V4000G23	12V	57.2	316	260
HPSI-O2035MTU	HPSI-2035MTU	1472	1840	1628	2035	12V4000G63	12V	57.2	358	260
HPSI-O2300MTU	HPSI-2300MTU	1664	2080	1840	2300	16V4000G23	16V	76.3	406	300
HPSI-O2500MTU	HPSI-2500MTU	1800	2250	2000	2500	16V4000G63	16V	76.3	442	300
HPSI-O2800MTU	HPSI-2800MTU	2000	2500	2240	2800	20V4000G23	20V	95.4	505	390
HPSI-O3000MTU	HPSI-3000MTU	2240	2800	2400	3000	20V4000G63	20V	95.4	549	390
HPSI-O3300MTU	HPSI-3300MTU	2400	3000	2640	3300	20V4000G63L	20V	95.4	585	390

Specification subject to change without prior note

Remark: MTU engines are made in Germany except the series of MTU2000(25 65)which are made in China.

50 Hz | 3P 4W | 400 V | Pf 0.8

TRANSPORTATION DATA

Genset Model		Dimensions LxWxH(m)		Weight(kg)		Fuel Tank Capacity(L)	
Open Type	Silent Type	Open Type	Silent Type	Open Type	Silent Type	Open Type	Silent Type
HPSI-O300MTU	HPSI-300MTU	3.2×1.3×1.85	4.2×1.5×2.1	3050	4050	600	770
HPSI-O330MTU	HPSI-330MTU	3.2×1.3×1.85	4.2×1.5×2.1	3100	4100	600	770
HPSI-O400MTU	HPSI-400MTU	3.2×1.3×1.85	4.2×1.5×2.1	3600	4600	600	770
HPSI-O450MTU	HPSI-450MTU	3.2×1.3×1.85	4.2×1.5×2.1	3650	4650	600	770
HPSI-O500MTU	HPSI-500MTU	3.28×1.315×2.0	4.8×1.9×2.28	4000	5800	680	1210
HPSI-O550MTU	HPSI-550MTU	3.28×1.315×2.0	4.8×1.9×2.28	4200	6000	680	1210
HPSI-O660MTU	HPSI-660MTU	3.95×1.58×2.15	4.8×1.9×2.28	4700	6500	680	1210
HPSI-O725MTU	HPSI-725MTU	3.95×1.58×2.15	4.8×1.9×2.28	4700	6500	680	1210
HPSI-O725MTU	HPSI-725MTU	3.95×1.58×2.15	4.8×1.9×2.28	4700	6500	680	1210
HPSI-O850MTU	HPSI-850MTU	4.1×1.6×2.15	5.8×2.15×2.54	5200	7700	N/A	1000
HPSI-O1000MTU	HPSI-1000MTU	4.5×1.6×2.27	5.8×2.15×2.54	6100	8500	N/A	1000
HPSI-O1100MTU	HPSI-1100MTU	4.5×1.6×2.27	5.8×2.15×2.54	6500	9000	N/A	1000
HPSI-O1230MTU	HPSI-1230MTU	4.8×1.9×2.35	20ft container	7500	11500	N/A	1000
HPSI-O1375MTU	HPSI-1375MTU	4.6X1.9X2.4	40ft container	10600	19100	N/A	1000
HPSI-O1705MTU	HPSI-1705MTU	4.6×1.9×2.45	40ft container	10800	19300	N/A	1000
HPSI-O1830MTU	HPSI-1830MTU	4.75×1.9×2.32	40ft container	11200	19600	N/A	N/A
HPSI-O2035MTU	HPSI-2035MTU	6.18×2.57×2.75	40ft container	11756	20350	N/A	N/A
HPSI-O2300MTU	HPSI-2300MTU	6.87×2.57×2.78	40ft container	15200	25000	N/A	N/A
HPSI-O2500MTU	HPSI-2500MTU	6.93×2.57×2.78	40ft container	15300	26000	N/A	N/A
HPSI-O2800MTU	HPSI-2800MTU	7.6×3×2.9	40ft container	18530	31400	N/A	N/A
HPSI-O3000MTU	HPSI-3000MTU	7.6×3×2.9	40ft container	18530	31400	N/A	N/A
HPSI-O3300MTU	HPSI-3300MTU	7.6×3×2.9	40ft container	18530	31400	N/A	N/A

Remark: An optional external fuel tank can be customized as per customer's requirements

Product Specification Sheet

60 Hz | 3P 4W | 220V 440V | Pf 0.8

GENERATING SETS POWERED BY MTU ENGINE

Genset Model		Prime Power		Standby Power		Engine Model	NO.of Cylinder	Displac-ement	Rated Fuel Consum-ption@100%Load	Lub Oil Capacity
Open Type	Silent Type	kW	kVA	kW	kVA			L	L/h	L
HPSI-O344MTU	HPSI-344MTU	250	313	275	344	6R1600G10S/70S	6	10.5	73	46
HPSI-O375MTU	HPSI-375MTU	275	344	300	375	6R1600G20S/80S	6	10.5	76	46
HPSI-O450MTU	HPSI-450MTU	330	413	360	450	8V1600G10S/70S	8V	14	93	46
HPSI-O500MTU	HPSI-500MTU	365	456	400	500	8V1600G20S/80S	8V	14	100	46
HPSI-O563MTU	HPSI-563MTU	416	520	450	563	10V1600G10S/70S	10V	17.5	106	60.5
HPSI-O625MTU	HPSI-625MTU	460	575	500	625	10V1600G20S/80S	10V	17.5	115	60.5
HPSI-O688MTU	HPSI-688MTU	500	625	550	688	12V1600G10S/70S	12V	21	133	72.5
HPSI-O750MTU	HPSI-750MTU	550	688	600	750	12V1600G20S/80S	12V	21	140	72.5
HPSI-O875MTU	HPSI-875MTU	630	788	700	875	12V2000G45	12V	23.88	176	77
HPSI-O1000MTU	HPSI-1000MTU	720	900	800	1000	12V2000G85	12V	23.88	199	77
HPSI-O1145MTU	HPSI-1145MTU	828	1035	916	1145	16V2000G45	16V	31.84	222	102
HPSI-O1250MTU	HPSI-1250MTU	920	1150	1000	1250	16V2000G85	16V	31.84	244	102
HPSI-O1500MTU	HPSI-1500MTU	1092	1365	1200	1500	18V2000G85	18V	35.82	284	130
HPSI-O1500MTU	HPSI-1500MTU	N/A	N/A	1200	1500	18V2000G76S	18V	40.2	323	122
HPSI-O1690MTU	HPSI-1690MTU	1300	1625	1352	1690	12V4000G43	12V	57.2	352	260
HPSI-O2000MTU	HPSI-2000MTU	1400	1750	1600	2000	12V4000G43	12V	57.2	352	260
HPSI-O2238MTU	HPSI-2238MTU	1630	2038	1790	2238	12V4000G83	12V	57.2	411	260
HPSI-O2625MTU	HPSI-2625MTU	1880	2350	2100	2625	16V4000G43	16V	76.3	475	300
HPSI-O2875MTU	HPSI-2875MTU	2028	2535	2300	2875	16V4000G83	16V	76.3	542	300
HPSI-O3200MTU	HPSI-3200MTU	2320	2900	2560	3200	20V4000G43	20V	95.4	572	390
HPSI-O3500MTU	HPSI-3500MTU	2540	3175	2800	3500	20V4000G83	20V	95.4	628	390
HPSI-O4000MTU	HPSI-4000MTU	2800	3500	3200	4000	20V4000G83L	20V	95.4	708	390

Specification subject to change without prior note

Remark: MTU engines are made in Germany except the series of MTU2000(45 85)which are made in China.

60 Hz | 3P 4W | 220V 440V | Pf 0.8

TRANSPORTATION DATA

Genset Model		Dimensions LxWxH(m)		Weight(kg)		Fuel Tank Capacity(L)	
Open Type	Silent Type	Open Type	Silent Type	Open Type	Silent Type	Open Type	Silent Type
HPSI-O344MTU	HPSI-344MTU	3.2×1.3×1.85	4.2×1.5×2.1	3050	4050	600	770
HPSI-O375MTU	HPSI-375MTU	3.2×1.3×1.85	4.2×1.5×2.1	3050	4050	600	770
HPSI-O450MTU	HPSI-450MTU	3.2×1.3×1.85	4.2×1.5×2.1	3500	4500	600	770
HPSI-O500MTU	HPSI-500MTU	3.2×1.3×1.85	4.2×1.5×2.1	3600	4600	600	770
HPSI-O563MTU	HPSI-563MTU	3.28×1.315×2.0	4.8×1.9×2.28	4000	5800	680	1210
HPSI-O625MTU	HPSI-625MTU	3.28×1.315×2.0	4.8×1.9×2.28	4200	6000	680	1210
HPSI-O688MTU	HPSI-688MTU	3.95×1.58×2.15	4.8×1.9×2.28	4700	6500	680	1210
HPSI-O750MTU	HPSI-750MTU	3.95×1.58×2.15	4.8×1.9×2.28	4700	6500	680	1210
HPSI-O875MTU	HPSI-875MTU	4×1.6×2.15	5.8×2.15×2.54	5000	7500	N/A	1000
HPSI-O1000MTU	HPSI-1000MTU	4×1.6×2.15	5.8×2.15×2.54	5200	7700	N/A	1000
HPSI-O1145MTU	HPSI-1145MTU	4.5×1.6×2.27	5.8×2.15×2.54	6100	8500	N/A	1000
HPSI-O1250MTU	HPSI-1250MTU	4.5×1.6×2.27	5.8×2.15×2.54	6500	9000	N/A	1000
HPSI-O1500MTU	HPSI-1500MTU	4.8×1.9×2.35	20ft container	7500	11500	N/A	1000
HPSI-O1500MTU	HPSI-1500MTU	4.6×1,9X2.4	40ft container	10600	19100	N/A	1000
HPSI-O1690MTU	HPSI-1690MTU	4.6×1.9×2.4	40ft container	10600	19100	N/A	1000
HPSI-O2000MTU	HPSI-2000MTU	4.6×1.9×2.45	40ft container	10800	19300	N/A	1000
HPSI-O2238MTU	HPSI-2238MTU	6.18×2.57×2.75	40ft container	11756	20350	N/A	N/A
HPSI-O2625MTU	HPSI-2625MTU	6.87×2.57×2.78	40ft container	15200	25000	N/A	N/A
HPSI-O2875MTU	HPSI-2875MTU	6.87×2.57×2.78	40ft container	15400	25200	N/A	N/A
HPSI-O3200MTU	HPSI-3200MTU	7.6×3×2.9	40ft container	18530	31400	N/A	N/A
HPSI-O3500MTU	HPSI-3500MTU	7.6×3×2.9	40ft container	18530	31400	N/A	N/A
HPSI-O4000MTU	HPSI-4000MTU	7.6×3×2.9	40ft container	18530	31400	N/A	N/A

Remark: An optional external fuel tank can be customized as per customer's requirements

Product Specification Sheet

50 Hz | 3P 4W | 400 V | Pf 0.8

GENERATING SETS POWERED BY MITSUBISHI ENGINE

Genset Model		Prime Power		Standby Power		Engine Model	NO.of Cylinder	Displac-ement	Rated Fuel Consum-ption@100%Load	Lub Oil Capacity
Open Type	Silent Type	kW	kVA	kW	kVA			L	L/h	L
HPSI-O275SL	HPSI-275SL	200	250	220	275	S6B-PTA	6	12.88	60	50
HPSI-O325SL	HPSI-325SL	236	295	260	325	S6B-PTA2	6	12.88	66	50
HPSI-O413SL	HPSI-413SL	300	375	330	413	S6B3-PTA	6	14.6	80	50
HPSI-O495SL	HPSI-495SL	360	450	396	495	S6A3-PTA	6	18.56	98	80
HPSI-O652SL	HPSI-652SL	474	593	521	652	S6R-PTA	6	24.51	124	100
HPSI-O737SL	HPSI-737SL	536	670	590	737	S6R2-PTA	6	29.96	144	100
HPSI-O825SL	HPSI-825SL	600	750	660	825	S6R2-PTAA	6	29.96	160	100
HPSI-O853SL	HPSI-853SL	620	775	682	853	S12A2-PTA	12	33.93	171	120
HPSI-O1133SL	HPSI-1133SL	824	1030	906	1133	S12H-PTA	12	37.11	226	200
HPSI-O1155SL	HPSI-1155SL	840	1050	924	1155	S12H-PTA	12	37.11	226	200
HPSI-O1382SL	HPSI-1382SL	1005	1256	1106	1382	S12R-PTA	12	49.03	266	180
HPSI-O1415SL	HPSI-1415SL	1028	1285	1132	1415	S12R-PTA	12	49.03	268	180
HPSI-O1540SL	HPSI-1540SL	1120	1400	1232	1540	S12R-PTA2	12	49.03	277	180
HPSI-O1650SL	HPSI-1650SL	1200	1500	1320	1650	S12R-PTAA2	12	49.03	308	180
HPSI-O1815SL	HPSI-1815SL	1320	1650	1452	1815	S16R-PTA	16	65.37	355	230
HPSI-O1925SL	HPSI-1925SL	1400	1750	1540	1925	S16R-PTA	16	65.37	355	230
HPSI-O209OSL	HPSI-2090SL	1520	1900	1672	2090	S16R-PTA2	16	65.37	376	230
HPSI-O2200SL	HPSI-2200SL	1600	2000	1760	2200	S16R-PTAA2	16	65.37	404	230
HPSI-O2475SL	HPSI-2475SL	1800	2250	1980	2475	S16R2-PTAW	16	79.9	448	290

Specification subject to change without prior note

50 Hz | 3P 4W | 400 V | Pf 0.8

MITSUBISHI

TRANSPORTATION DATA

Genset Model		Dimensions LxWxH(m)		Weight(kg)		Fuel Tank Capacity(L)	
Open Type	Silent Type	Open Type	Silent Type	Open Type	Silent Type	Open Type	Silent Type
HPSI-O275SL	HPSI-275SL	3.3×1.15×2.1	4.2x1.5×2.1	2800	3850	560	770
HPSI-O325SL	HPSI-325SL	3.3×1.15×2.1	4.2x1.5×2.1	3100	4150	560	770
HPSI-O413SL	HPSI-413SL	3.3×1.15×2.1	4.8x2.1×2.275	3400	5000	680	1210
HPSI-O495SL	HPSI-495SL	3.7×1.32×1.95	4.8x2.1×2.275	3600	5500	680	1210
HPSI-O652SL	HPSI-652SL	3.8×1.65×2.0	4.8x2.1×2.275	3600	5500	780	1210
HPSI-O737SL	HPSI-737SL	3.8×1.65×2.0	4.8x2.1×2.275	3600	5500	780	1210
HPSI-O825SL	HPSI-825SL	3.8×1.65×2.0	5.8×2.15×2.54	5600	7800	N/A	1000
HPSI-O853SL	HPSI-853SL	4.0×1.8×2.1	5.8×2.15×2.54	5800	8000	N/A	1000
HPSI-O1133SL	HPSI-1133SL	4.45×1.76×2.2	5.8×2.15×2.54	7070	9270	N/A	1000
HPSI-O1155SL	HPSI-1155SL	4.45×1.76×2.2	20ft container	8090	12090	N/A	1000
HPSI-O1382SL	HPSI-1382SL	4.58×2.1×2.46	20ft container	9260	13260	N/A	1000
HPSI-O1415SL	HPSI-1415SL	4.58×2.1×2.46	40ft container	9320	17320	N/A	2000
HPSI-O1540SL	HPSI-1540SL	5.0×2.25×3.05	40ft container	10500	18500	N/A	2000
HPSI-O1650SL	HPSI-1650SL	5.0×2.25×3.05	40ft container	11200	19200	N/A	2000
HPSI-O1815SL	HPSI-1815SL	6.2×2.2×2.82	40ft container	12250	20250	N/A	1200
HPSI-O1925SL	HPSI-1925SL	6.2×2.2×2.9	40ft container	12300	20300	N/A	N/A
HPSI-O209OSL	HPSI-2090SL	6.6×2.2×3.46	40ft container	12540	20540	N/A	N/A
HPSI-O2200SL	HPSI-2200SL	6.6×2.4×3.46	40ft container	14500	22500	N/A	N/A
HPSI-O2475SL	HPSI-2475SL	6.6×2.45×3.5	40ft containert	15000	23000	N/A	N/A

Remark: An optional external fuel tank can be customized as per customer's requirements

Product Specification Sheet

50 Hz | 3P 4W | 400 V | Pf 0.8

GENERATING SETS POWERED BY KUBOTA ENGINE										
Genset Model		Prime Power		Standby Power		Engine Model	NO.of Cylinder	Displac-ement	Rated Fuel Consum-ption@100%Load	Lub Oil Capacity
Open Type	Silent Type	kW	kVA	kW	kVA			L	L/h	L
HPSI-O7K	HPSI-7K	5	6.3	5.5	7	D905-E2BG	3	0.898	1.8	5.1
HPSI-O9K	HPSI-9K	6.7	8.4	7.4	9	D1105-E2BG	3	1.123	2.4	5.1
HPSI-O12K	HPSI-12K	9	11.3	9.9	12	V1505-E2BG	4	1.498	3.2	6.7
HPSI-O14K	HPSI-14K	10.4	13	11.4	14	D1703-E2BG	3	1.647	3.8	7.6
HPSI-O20K	HPSI-20K	14.5	18	16	20	V2203-E2BG	4	2.197	4.7	9.7
HPSI-O24K	HPSI-24K	17	21	18.7	24	V2003T-E2BG	4	1.999	5.6	7.6
HPSI-O30K	HPSI-30K	22	27.5	24	30	V3300-E2BG	4	3.318	7.5	13.2
HPSI-O38K	HPSI-38K	27.8	34.8	30.6	38	V3300T-E2BG	4	3.318	8.9	13.2

60 Hz | 3P 4W | 220V 440V | Pf 0.8

GENERATING SETS POWERED BY KUBOTA ENGINE										
Genset Model		Prime Power		Standby Power		Engine Model	NO.of Cylinder	Displac-ement	Rated Fuel Consum-ption@100%Load	Lub Oil Capacity
Open Type	Silent Type	kW	kVA	kW	kVA			L	L/h	L
HPSI-O8K	HPSI-8K	6	7.5	6.6	8	D905-E2BG	3	0.898	2.2	5.1
HPSI-O11K	HPSI-11K	8	10	8.8	11	D1105-E2BG	3	1.123	2.9	5.1
HPSI-O15K	HPSI-15K	10.8	13.5	11.9	15	V1505-E2BG	4	1.498	3.8	6.7
HPSI-O17K	HPSI-17K	12	15	13	17	D1703-E2BG	3	1.647	4.1	7.6
HPSI-O23K	HPSI-23K	17	21	18.7	23	V2203-E2BG	4	2.197	5.5	9.7
HPSI-O28K	HPSI-28K	20.6	26	22.7	28	V2003T-E2BG	4	1.999	6.8	7.6
HPSI-O38K	HPSI-38K	27.5	34	30	38	V3300-E2BG	4	3.318	9.2	13.2
HPSI-O47K	HPSI-47K	34	42.5	37.4	47	V3300T-E2BG	4	3.318	10.9	13.2

Specification subject to change without prior note

50 Hz | 3P 4W | 400 V | Pf 0.8

Kubota

TRANSPORTATION DATA							
Genset Model		Dimensions LxWxH(m)		Weight(kg)		Fuel Tank Capacity(L)	
Open Type	Silent Type	Open Type	Silent Type	Open Type	Silent Type	Open Type	Silent Type
HPSI-O7K	HPSI-7K	1.2×0.75×1.2	1.8×1.0×1.18	320	710	70	100
HPSI-O9K	HPSI-9K	1.2×0.75×1.2	1.8×1.0×1.18	325	715	70	100
HPSI-O12K	HPSI-12K	1.25×0.75×1.2	1.8×1.0×1.18	360	750	70	100
HPSI-O14K	HPSI-14K	1.3×0.8×1.2	1.8×1.0×1.18	420	810	75	100
HPSI-O20K	HPSI-20K	1.4×0.8×1.2	1.8×1.0×1.18	460	850	85	100
HPSI-O24K	HPSI-24K	1.4×0.8×1.2	1.8×1.0×1.18	470	860	85	100
HPSI-O30K	HPSI-30K	1.6×0.8×1.2	1.9×1.0×1.18	600	990	90	115
HPSI-O38K	HPSI-38K	1.6×0.8×1.2	1.9×1.0×1.18	680	1070	90	115

60 Hz | 3P 4W | 220V 440V | Pf 0.8

TRANSPORTATION DATA							
Genset Model		Dimensions LxWxH(m)		Weight(kg)		Fuel Tank Capacity(L)	
Open Type	Silent Type	Open Type	Silent Type	Open Type	Silent Type	Open Type	Silent Type
HPSI-O8K	HPSI-8K	1.2×0.75×1.2	1.8×1.0×1.1	320	680	70	100
HPSI-O11K	HPSI-11K	1.2×0.75×1.2	1.8×1.0×1.1	325	685	70	100
HPSI-O15K	HPSI-15K	1.25×0.75×1.2	1.8×1.0×1.1	360	720	70	100
HPSI-O17K	HPSI-17K	1.3×0.8×1.2	1.8×1.0×1.1	420	780	75	100
HPSI-O23K	HPSI-23K	1.4×0.8×1.2	1.8×1.0×1.1	460	820	85	100
HPSI-O28K	HPSI-28K	1.4×0.8×1.2	1.8×1.0×1.1	470	830	85	100
HPSI-O38K	HPSI-38K	1.6×0.8×1.2	1.9×1.0×1.1	600	960	90	115
HPSI-O47K	HPSI-47K	1.6×0.8×1.2	1.9×1.0×1.1	680	1040	90	115

Remark: An optional external fuel tank can be customized as per customer's requirements

Product Specification Sheet

50 Hz | 3P 4W | 400 V | Pf 0.8

GENERATING SETS POWERED BY YANMAR ENGINE

Genset Model		Prime Power		Standby Power		Engine Model	NO.of Cylinder	Displac-ement	Rated Fuel Consum-ption@100%Load	Lub Oil Capacity
Open Type	Silent Type	kW	kVA	kW	kVA			L	L/h	L
HPSI-O10YM	HPSI-10YM	7	8.8	7.7	10	3TNV76-GGE	3	1.116	2.8	3.5
HPSI-O12YM	HPSI-12YM	8.5	10.6	9.4	12	3TNV82A-GGE	3	1.331	3.2	5.5
HPSI-O14YM	HPSI-14YM	10	12.5	11	14	3TNV88-GGE	3	1.642	3.8	6.7
HPSI-O17YM	HPSI-17YM	12	15	13	17	3TNV84T-GGF	3	1.496	4.56	6.7
HPSI-O22YM	HPSI-22YM	16	20	17.6	22	4TNV84T-GGE	4	1.995	6.1	7.4
HPSI-O34YM	HPSI-34YM	25	31	27.5	34	4TNV98-GGE	4	3.319	9.3	10.5
HPSI-O44YM	HPSI-44YM	32	40	35	44	4TNV98T-GGE	4	3.319	10.8	10.5
HPSI-O55YM	HPSI-55YM	40	50	44	55	4TNV106-GGE	4	4.412	13.8	14
HPSI-O62YM	HPSI-62YM	45	56	49.5	62	4TNV106T-GGE	4	4.412	14.5	14

60 Hz | 3P 4W | 220V 440V | Pf 0.8

GENERATING SETS POWERED BY YANMAR ENGINE

Genset Model		Prime Power		Standby Power		Engine Model	NO.of Cylinder	Displac-ement	Rated Fuel Consum-ption@100%Load	Lub Oil Capacity
Open Type	Silent Type	kW	kVA	kW	kVA			L	L/h	L
HPSI-O11YM	HPSI-11YM	8	10	8.8	11	3TNV76-GGE	3	1.116	3.3	3.5
HPSI-O14YM	HPSI-14YM	10	12.5	11	14	3TNV82A-GGE	3	1.331	3.8	5.5
HPSI-O17YM	HPSI-17YM	12	15	13	17	3TNV88-GGE	3	1.642	4.7	6.7
HPSI-O21YM	HPSI-21YM	15	18.8	16.5	21	3TNV84T-GGE	3	1.496	5.4	6.7
HPSI-O28YM	HPSI-28YM	20	25	22	28	4TNV84T-GGE	4	1.995	7.7	7.4
HPSI-O41YM	HPSI-41YM	30	37.5	33	41	4TNV98-GGE	4	3.319	11.1	10.5
HPSI-O52YM	HPSI-52YM	37.5	46.9	41	52	4TNV98T-GGE	4	3.319	13.1	10.5
HPSI-O58YM	HPSI-58YM	42	52.5	46	58	4TNV106-GGE	4	4.412	16.4	14
HPSI-O69YM	HPSI-69YM	50	62.5	55	69	4TNV106T-GGE	4	4.412	17.6	14

Specification subject to change without prior note

50 Hz | 3P 4W | 400 V | Pf 0.8

YANMAR

TRANSPORTATION DATA

Genset Model		Dimensions LxWxH(m)		Weight(kg)		Fuel Tank Capacity(L)	
Open Type	Silent Type	Open Type	Silent Type	Open Type	Silent Type	Open Type	Silent Type
HPSI-O10YM	HPSI-10YM	1.2×0.75×1.2	1.8×1.0×1.18	380	730	70	115
HPSI-O12YM	HPSI-12YM	1.2×0.75×1.2	1.8×1.0×1.18	380	730	70	115
HPSI-O14YM	HPSI-14YM	1.2×0.75×1.2	1.8×1.0×1.18	400	760	70	115
HPSI-O17YM	HPSI-17YM	1.3×0.75×1.2	1.8×1.0×1.18	420	770	75	115
HPSI-O22YM	HPSI-22YM	1.3×0.75×1.2	1.8×1.0×1.18	450	810	75	115
HPSI-O34YM	HPSI-34YM	1.6×0.75×1.2	2.3×1.1×1.24	585	1005	115	135
HPSI-O44YM	HPSI-44YM	1.6×0.75×1.2	2.3×1.1×1.24	660	1080	115	135
HPSI-O55YM	HPSI-55YM	1.85×0.85×1.25	2.3×1.1×1.29	820	1250	140	135
HPSI-O62YM	HPSI-62YM	1.85×0.85×1.25	2.3×1.1×1.29	840	1270	140	135

60 Hz | 3P 4W | 220V 440V | Pf 0.8

TRANSPORTATION DATA

Genset Model		Dimensions LxWxH(m)		Weight(kg)		Fuel Tank Capacity(L)	
Open Type	Silent Type	Open Type	Silent Type	Open Type	Silent Type	Open Type	Silent Type
HPSI-O11YM	HPSI-11YM	1.2×0.75×1.2	1.8×1.0×1.18	380	730	70	115
HPSI-O14YM	HPSI-14YM	1.2×0.75×1.2	1.8×1.0×1.18	380	730	70	115
HPSI-O17YM	HPSI-17YM	1.2×0.75×1.2	1.8×1.0×1.18	400	760	70	115
HPSI-O21YM	HPSI-21YM	1.2×0.75×1.2	1.8×1.0×1.18	420	770	70	115
HPSI-O28YM	HPSI-28YM	1.3×0.75×12	1.8×1.0×1.18	450	810	70	115
HPSI-O41YM	HPSI-41YM	1.6×0.75×1.20	2.3×1.1×1.24	585	1005	70	135
HPSI-O52YM	HPSI-52YM	1.6×0.75×1.20	2.3×1.1×1.24	650	1070	115	135
HPSI-O58YM	HPSI-58YM	1.85×0.85×1.25	2.3×1.1×1.29	800	1230	140	135
HPSI-O69YM	HPSI-69YM	1.85×0.85×1.25	2.3×1.1×1.29	820	1250	140	135

Remark: An optional external fuel tank can be customized as per customer's requirements

Product Specification Sheet

50 Hz | 3P 4W | 400 V | Pf 0.8

GENERATING SETS POWERED BY DEUTZ ENGINE

Genset Model		Prime Power		Standby Power		Engine Model	NO.of Cylinder	Displac-ement	Rated Fuel Consum-ption@100%Load	Lub Oil Capacity
Open Type	Silent Type	kW	kVA	kW	kVA			L	L/h	L
HPSI-O66DZ	HPSI-66DZ	48	60	53	66	BF4M2012	4	4.04	16.9	8.5
HPSI-O80DZ	HPSI-80DZ	58	72.5	64	80	BF4M2012C	4	4.04	19.3	8.5
HPSI-O110DZ	HPSI-110DZ	80	100	88	110	BF4M1013EC	4	4.76	25.8	11
HPSI-O138DZ	HPSI-138DZ	100	125	110	138	BF4M1013FC	4	4.76	32.3	11
HPSI-O165DZ	HPSI-165DZ	128	160	132	165	BF6M1013EC	6	7.15	38.5	20
HPSI-O193DZ	HPSI-193DZ	140	175	154	193	BF6M1013FCG2	6	7.15	45.9	20
HPSI-O220DZ	HPSI-220DZ	160	200	176	220	BF6M1013FCG3	6	7.15	50.8	20
HPSI-O250DZ	HPSI-250DZ	184	230	200	250	BF6M1015-LA GA	6	11.906	50	38
HPSI-O275DZ	HPSI-275DZ	200	250	220	275	BF6M1015-LA G1A	6	11.906	54	38
HPSI-O313DZ	HPSI-313DZ	230	288	250	313	BF6M1015-LA G2A	6	11.906	61	38
HPSI-O350DZ	HPSI-350DZ	250	312	280	350	BF6M1015C-LA G3A	6	11.906	68	38
HPSI-O375DZ	HPSI-375DZ	280	350	300	375	BF6M1015C-LA G4	6	11.906	75	38
HPSI-O412DZ	HPSI-412DZ	300	375	330	412	BF6M1015CP-LA G	6	11.906	80	38
HPSI-O475DZ	HPSI-475DZ	350	438	380	475	BF8M1015C-LA G1A	8	15.874	96	48
HPSI-O500DZ	HPSI-500DZ	360	450	400	500	BF8M1015C-LA G2	8	15.874	99	48
HPSI-O525DZ	HPSI-525SZ	380	475	420	525	BF8M1015CP-LAG1A	8	15.874	106	48
HPSI-O550DZ	HPSI-550DZ	400	500	440	550	BF8M1015CP-LA G2	8	15.874	110	48
HPSI-O563DZ	HPSI-563DZ	410	513	450	563	BF8M1015CP-LA G3	8	15.874	117	48
HPSI-O588DZ	HPSI-588DZ	430	538	470	588	BF8M1015CP-LA G4	8	15.874	122	48
HPSI-O600DZ	HPSI-600DZ	450	563	480	600	BF8M1015CP-LA G5	8	15.874	125	48
HPSI-O750DZ	HPSI-750DZ	550	688	600	750	HC12V132ZL-LAG1A	12	23.812	155	54
HPSI-O825DZ	HPSI-825DZ	600	750	660	825	HC12V132ZL-LAG2A	12	23.812	172	54

60 Hz | 3P 4W | 220V 440V | Pf 0.8

GENERATING SETS POWERED BY DEUTZ ENGINE

Genset Model		Prime Power		Standby Power		Engine Model	NO.of Cylinder	Displac-ement	Rated Fuel Consum-ption@100%Load	Lub Oil Capacity
Open Type	Silent Type	kW	kVA	kW	kVA			L	L/h	L
HPSI-O75DZ	HPSI-75DZ	56	70	60	75	BF4M2012	4	4.04	18.9	8.5
HPSI-O94DZ	HPSI-94DZ	68	85	75	94	BF4M2012C	4	4.04	22.7	8.5
HPSI-O125DZ	HPSI-125DZ	91	114	100	125	BF4M1013EC	4	4.76	28	11
HPSI-O151DZ	HPSI-151DZ	110	138	121	151	BF4M1013FC	4	4.76	36.5	11
HPSI-O184DZ	HPSI-184DZ	134	168	147	184	BF6M1013EC	6	7.15	41.8	20
HPSI-O220DZ	HPSI-220DZ	160	200	176	220	BF6M1013FCG2	6	7.15	52.7	20
HPSI-O250DZ	HPSI-250DZ	180	225	200	250	BF6M1013FCG3	6	7.15	60.2	20
HPSI-O275DZ	HPSI-275DZ	200	250	220	275	BF6M1015-LA GB	6	11.906	54	38
HPSI-O302DZ	HPSI-302DZ	220	275	242	302	BF6M1015C-LA G1B	6	11.906	59	38
HPSI-O350DZ	HPSI-350DZ	250	312	280	350	BF6M1015C-LA G2B	6	11.906	67	38
HPSI-O375DZ	HPSI-375DZ	280	350	300	375	BF6M1015C-LA G3B	6	11.906	73.8	38
HPSI-O400DZ	HPSI-400DZ	290	363	320	400	BF6M1015CP-LA G1B	6	11.906	81	38
HPSI-O425DZ	HPSI-425DZ	320	400	340	425	BF6M1015CP-LA G2B	6	11.906	89	38
HPSI-O500DZ	HPSI-500DZ	360	450	400	500	BF8M1015C-LA G1B	8	15.874	105	48
HPSI-O525DZ	HPSI-525DZ	380	475	420	525	BF8M1015CP-LA G1B	8	15.874	110	48
HPSI-O563DZ	HPSI-563DZ	400	500	450	563	BF8M1015CP-LA G2B	8	15.874	119	48
HPSI-O625DZ	HPSI-625DZ	450	563	500	625	BF8M1015CP-LA G3B	8	15.874	129	48
HPSI-O750DZ	HPSI-750DZ	550	688	600	750	HC12V132ZL-LAG1B	12	23.812	155	54
HPSI-O825DZ	HPSI-825DZ	600	750	660	825	HC12V132ZL-LAG2B	12	23.812	172	54

Specification subject to change without prior note

50 Hz | 3P 4W | 400 V | Pf 0.8

DEUTZ

TRANSPORTATION DATA

Genset Model		Dimensions LxWxH(m)		Weight(kg)		Fuel Tank Capacity(L)	
Open Type	Silent Type	Open Type	Silent Type	Open Type	Silent Type	Open Type	Silent Type
HPSI-O66DZ	HPSI-66DZ	1.9×0.9×1.32	2.3×1.1×1.29	955	1325	150	150
HPSI-O80DZ	HPSI-80DZ	1.9×0.9×1.32	2.3×1.1×1.29	1000	1370	150	150
HPSI-O110DZ	HPSI-110DZ	2.2×0.94×1.57	2.6×1.1×1.7	1220	1650	235	260
HPSI-O138DZ	HPSI-138DZ	2.2×0.94×1.57	2.8×1.1×1.7	1300	1750	235	280
HPSI-O165DZ	HPSI-165DZ	2.5×1.05×1.57	3.8×1.3×1.85	1850	2650	320	450
HPSI-O193DZ	HPSI-193DZ	2.6×1.05×1.73	3.8×1.3×1.85	1900	2700	400	450
HPSI-O220DZ	HPSI-220DZ	2.6×1.05×1.73	3.8×1.3×1.85	1950	2750	400	450
HPSI-O250DZ	HPSI-250DZ	2.7×1.15×2.0	3.8×1.3×2.0	2250	3150	500	500
HPSI-O275DZ	HPSI-275DZ	2.7×1.15×2.0	3.8×1.3×2.0	2250	3150	500	500
HPSI-O313DZ	HPSI-313DZ	2.8×1.15×2.1	4.2×1.5×2.1	2650	3750	560	770
HPSI-O350DZ	HPSI-350DZ	2.8×1.15×2.1	4.2×1.5×2.1	2750	3850	560	770
HPSI-O375DZ	HPSI-375DZ	2.8×1.15×2.1	4.2×1.5×2.1	2900	4000	560	770
HPSI-O412DZ	HPSI-412DZ	2.8×1.15×2.1	4.2×1.5×2.1	2900	4000	560	770
HPSI-O475DZ	HPSI-475DZ	3.06×1.48×2.1	4.8×1.7×2.28	3600	5200	680	1100
HPSI-O500DZ	HPSI-500DZ	3.06×1.48×2.1	4.8×1.7×2.28	3600	5200	680	1100
HPSI-O525DZ	HPSI-525SZ	3.06×1.48×2.1	4.8×1.7×2.28	3700	5300	680	1100
HPSI-O550DZ	HPSI-550DZ	3.06×1.48×2.1	4.8×1.7×2.28	3600	5200	680	1100
HPSI-O563DZ	HPSI-563DZ	3.06×1.48×2.1	4.8×1.7×2.28	3600	5200	680	1100
HPSI-O588DZ	HPSI-588DZ	3.06×1.48×2.1	4.8×1.7×2.28	3600	5200	680	1100
HPSI-O600DZ	HPSI-600DZ	3.06×1.48×2.1	4.8×1.7×2.28	3750	5300	680	1100
HPSI-O750DZ	HPSI-750DZ	4.2×1.7×2.4	5.8×2.1×2.5	5400	7900	N/A	950
HPSI-O825DZ	HPSI-825DZ	4.2×1.7×2.4	5.8×2.1×2.5	5400	7900	N/A	950

60 Hz | 3P 4W | 220V 440V | Pf 0.8

TRANSPORTATION DATA

Genset Model		Dimensions LxWxH(m)		Weight(kg)		Fuel Tank Capacity(L)	
Open Type	Silent Type	Open Type	Silent Type	Open Type	Silent Type	Open Type	Silent Type
HPSI-O75DZ	HPSI-75DZ	1.9×0.9×1.32	2.3×1.1×1.29	955	1325	150	150
HPSI-O94DZ	HPSI-94DZ	1.9×0.9×1.32	2.3×1.1×1.29	1000	1370	150	150
HPSI-O125DZ	HPSI-125DZ	2.2×0.94×1.57	2.6×1.1×1.7	1220	1650	235	260
HPSI-O151DZ	HPSI-151DZ	2.2×0.94×1.57	2.8×1.1×1.7	1250	1700	235	280
HPSI-O184DZ	HPSI-184DZ	2.5×1.05×1.57	3.8×1.3×1.85	1800	2600	320	450
HPSI-O220DZ	HPSI-220DZ	2.6×1.05×1.73	3.8×1.3×1.85	1900	2700	400	450
HPSI-O250DZ	HPSI-250DZ	2.6×1.05×1.73	3.8×1.3×1.85	1950	2750	400	450
HPSI-O275DZ	HPSI-275DZ	2.7×1.15×2.0	3.8×1.3×2.0	2250	3150	500	500
HPSI-O302DZ	HPSI-302DZ	2.7×1.15×2.0	3.8×1.3×2.0	2250	3150	500	500
HPSI-O350DZ	HPSI-350DZ	2.8×1.15×2.1	4.2×1.5×2.1	2650	3750	560	770
HPSI-O375DZ	HPSI-375DZ	2.8×1.15×2.1	4.2×1.5×2.1	2650	3750	560	770
HPSI-O400DZ	HPSI-400DZ	2.8×1.15×2.1	4.2×1.5×2.1	2750	3850	560	770
HPSI-O425DZ	HPSI-425DZ	2.8×1.15×2.1	4.2×1.5×2.1	2900	4000	560	770
HPSI-O500DZ	HPSI-500DZ	3.06×1.48×2.1	4.8×1.7×2.28	3600	5200	680	1100
HPSI-O525DZ	HPSI-525DZ	3.06×1.48×2.1	4.8×1.7×2.28	3600	5200	680	1100
HPSI-O563DZ	HPSI-563DZ	3.06×1.48×2.1	4.8×1.7×2.28	3600	5200	680	1100
HPSI-O625DZ	HPSI-625DZ	3.06×1.48×2.1	4.8×1.7×2.28	3750	5300	680	1100
HPSI-O750DZ	HPSI-750DZ	4.2×1.7×2.4	5.8×2.1×2.5	5000	7400	N/A	950
HPSI-O825DZ	HPSI-825DZ	4.2×1.7×2.4	5.8×2.1×2.5	5100	7500	N/A	950

Remark: An optional external fuel tank can be customized as per customer's requirements

Product Specification Sheet

50 Hz | 3P 4W | 400 V | Pf 0.8

GENERATING SETS POWERED BY YUCHAI ENGINE

Genset Model		Prime Power		Standby Power		Engine Model	NO.of Cylinder	Displac-ement	Rated Fuel Consum-ption@100%Load	Lub Oil Capacity
Open Type	Silent Type	kW	kVA	kW	kVA			L	L/h	L
HPSI-O28YC	HPSI-28YC	20	25	22	28	YC4FA40Z-D20	4	2.982	7.2	8
HPSI-O40YC	HPSI-40YC	30	38	32	40	YC4FA55Z-D20	4	2.982	9.4	8
HPSI-O55YC	HPSI-55YC	40	50	44	55	YC4FA75L-D20	4	2.982	12.5	8
HPSI-O62YC	HPSI-62YC	45	56	50	62	YC4D85Z-D20	4	4.214	13.1	13
HPSI-O66YC	HPSI-66YC	48	60	53	66	YC4D90Z-D21	4	4.214	14.3	13
HPSI-O80YC	HPSI-80YC	58	73	64	80	YC4A100Z-D20	4	4.837	16.7	13
HPSI-O94YC	HPSI-94YC	68	85	75	94	YC6B135Z-D20	6	6.871	19	17
HPSI-O103YC	HPSI-103YC	75	94	83	103	YC6B135Z-D20	6	6.871	21.4	17
HPSI-O125YC	HPSI-125YC	90	113	100	125	YC6B155L-D21	6	6.871	24.5	17
HPSI-O138YC	HPSI-138YC	100	125	110	138	YC6B180L-D20	6	6.871	28.6	17
HPSI-O165YC	HPSI-165YC	120	150	132	165	YC6B205L-D20	6	7.252	30.1	22
HPSI-O188YC	HPSI-188YC	140	175	150	188	YC6A230L-D20	6	7.252	35.4	22
HPSI-O200YC	HPSI-200YC	150	188	160	200	YC6A245L-D21	6	7.252	38.3	22
HPSI-O220YC	HPSI-220YC	160	200	176	220	YC6G270L-D20	6	7.8	40.6	25
HPSI-O275YC	HPSI-275YC	200	250	220	275	YC6MK350L-D20	6	10.338	53.9	28
HPSI-O344YC	HPSI-344YC	250	313	275	344	YC6MK420L-D20	6	10.338	65.2	28
HPSI-O385YC	HPSI-385YC	280	350	308	385	YC6MJ480L-D20	6	10.338	73.6	28
HPSI-O413YC	HPSI-413YC	300	375	330	413	YC6K500-D30	6	12.16	80	32
HPSI-O440YC	HPSI-440YC	320	400	352	440	YC6K520-D30	6	12.16	85	32
HPSI-O481YC	HPSI-481YC	350	438	385	481	YC6K570-D30	6	12.94	95.2	32
HPSI-O495YC	HPSI-495YC	360	450	396	495	YC6T600L-D22	6	16.35	93	52
HPSI-O550YC	HPSI-550YC	400	500	440	550	YC6T660L-D20	6	16.35	102.3	52
HPSI-O619YC	HPSI-619YC	450	563	495	619	YC6TD780L-D20	6	16.35	121	52
HPSI-O688YC	HPSI-688YC	500	625	550	688	YC6TD840L-D20	6	19.60	130	52
HPSI-O825YC	HPSI-825YC	600	750	660	825	YC6C1020L-D20	6	39.58	158	180
HPSI-O888YC	HPSI-888YC	648	810	710	888	YC6C1070L-D20	6	39.58	166	180
HPSI-O1000YC	HPSI-1000YC	730	913	800	1000	YC6C1220L-D20	6	39.58	189	180
HPSI-O1100YC	HPSI-1100YC	800	1000	880	1100	YC6C1320L-D20	6	39.58	204	180
HPSI-O1250YC	HPSI-1250YC	900	1125	1000	1250	YC6C1520-D31	6	39.58	233	180
HPSI-O1375YC	HPSI-1375YC	1000	1250	1100	1375	YC12VC1680L-D20	12	79.17	260	280
HPSI-O1625YC	HPSI-1625YC	1200	1500	1300	1625	YC12VC2070L-D20	12	79.17	320	280
HPSI-O1815YC	HPSI-1815YC	1320	1650	1452	1815	YC12VC2270L-D20	12	79.17	353	280
HPSI-O2000YC	HPSI-2000YC	1500	1875	1600	2000	YC12VC2510L-D20	12	79.17	390	280
HPSI-O2200YC	HPSI-2200YC	1600	2000	1760	2200	YC16VC2720L-D20	16	105	418	370
HPSI-O2250YC	HPSI-2250YC	1700	2125	1800	2250	YC12VC2700-D31	12	79.17	414	280
HPSI-O2420YC	HPSI-2420YC	1760	2200	1936	2420	YC16VC3000L-D20	16	105	464	370
HPSI-O2750YC	HPSI-2750YC	2000	2500	2200	2750	YC16VC3260L-D20	16	105	511	370
HPSI-O3000YC	HPSI-3000YC	2200	2750	2400	3000	YC16VC3600L-D20	16	105	557	370

Specification subject to change without prior note

50 Hz | 3P 4W | 400 V | Pf 0.8

YUCHAI

TRANSPORTATION DATA

Genset Model		Dimensions LxWxH(m)		Weight(kg)		Fuel Tank Capacity(L)	
Open Type	Silent Type	Open Type	Silent Type	Open Type	Silent Type	Open Type	Silent Type
HPSI-O28YC	HPSI-28YC	1.7×0.8×1.2	2.3×1.1×1.24	700	1070	115	135
HPSI-O40YC	HPSI-40YC	1.7×0.8×1.2	2.3×1.1×1.24	770	1140	115	135
HPSI-O55YC	HPSI-55YC	1.8×0.8×1.2	2.3×1.1×1.24	830	1200	115	135
HPSI-O62YC	HPSI-62YC	1.9×0.85×1.25	2.3×1.1×1.29	890	1260	135	135
HPSI-O66YC	HPSI-66YC	1.9×0.85×1.25	2.3×1.1×1.29	890	1260	135	135
HPSI-O80YC	HPSI-80YC	1.9×0.85×1.25	2.3×1.1×1.29	920	1290	135	135
HPSI-O94YC	HPSI-94YC	2.2×1.05×1.45	2.8×1.1×1.6	1380	1850	270	230
HPSI-O103YC	HPSI-103YC	2.2×1.05×1.45	2.8×1.1×1.6	1430	1900	270	230
HPSI-O125YC	HPSI-125YC	2.4×1.05×1.47	2.8×1.1×1.6	1480	1920	280	230
HPSI-O138YC	HPSI-138YC	2.4×1.05×1.47	2.8×1.1×1.6	1530	1970	280	230
HPSI-O165YC	HPSI-165YC	2.4×1.05×1.47	2.8×1.1×1.6	1580	2020	280	230
HPSI-O188YC	HPSI-188YC	2.55×1.05×1.5	3.0×1.2×1.8	1730	2280	310	380
HPSI-O200YC	HPSI-200YC	2.55×1.05×1.5	3.0×1.2×1.8	1780	2330	310	380
HPSI-O220YC	HPSI-220YC	2.6×1.05×1.7	3.8×1.3×1.85	1800	2560	400	400
HPSI-O275YC	HPSI-275YC	2.9×1.15×1.8	4.2×1.5×2.1	2500	3630	500	770
HPSI-O344YC	HPSI-344YC	3.1×1.15×1.85	4.2×1.5×2.1	2750	3850	560	770
HPSI-O385YC	HPSI-385YC	3.1×1.15×1.85	4.2×1.5×2.1	2960	4060	560	770
HPSI-O413YC	HPSI-413YC	3.3×1.15×1.92	4.2×1.5×2.1	3270	4370	560	770
HPSI-O440YC	HPSI-440YC	3.3×1.15×1.92	4.2×1.5×2.1	3320	4420	560	770
HPSI-O481YC	HPSI-481YC	3.5×1.35×2.1	4.8×1.9×2.28	4150	5150	680	1212
HPSI-O495YC	HPSI-495YC	3.5×1.35×2.1	4.8×1.9×2.28	4250	5300	680	1212
HPSI-O550YC	HPSI-550YC	3.5×1.35×2.1	4.8×1.9×2.28	4250	5300	680	1212
HPSI-O619YC	HPSI-619YC	3.5×1.35×2.1	4.8×1.9×2.28	4300	5400	680	1212
HPSI-O688YC	HPSI-688YC	3.6×1.4×2.25	5.1×1.9×2.43	4400	5560	770	1300
HPSI-O825YC	HPSI-825YC	4.4×1.85×2.38	5.8×2.25×2.58	7080	8700	N/A	1000
HPSI-O888YC	HPSI-888YC	4.5×1.4×2.25	5.8×2.25×2.58	7180	8800	N/A	1000
HPSI-O1000YC	HPSI-1000YC	4.5×1.4×2.25	5.8×2.25×2.58	7280	8950	N/A	1000
HPSI-O1100YC	HPSI-1100YC	4.5×1.4×2.25	5.8×2.25×2.58	7350	9150	N/A	1000
HPSI-O1250YC	HPSI-1250YC	4.65×2.1×2.23	20ft container	8700	13700	N/A	1000
HPSI-O1375YC	HPSI-1375YC	4.65×2.1×2.24	20ft container	8900	13900	N/A	1000
HPSI-O1625YC	HPSI-1625YC	5.2×2.1×2.31	40ft container	9500	19500	N/A	2000
HPSI-O1815YC	HPSI-1815YC	5.2×2.1×2.31	40ft container	9650	19650	N/A	2000
HPSI-O2000YC	HPSI-2000YC	4.6×1.9×2.45	40ft container	10800	20800	N/A	1000
HPSI-O2200YC	HPSI-2200YC	6.75×2.57×2.95	40ft container	15500	21256	N/A	N/A
HPSI-O2250YC	HPSI-2250YC	6.2×2.57×2.85	40ft container	11256	25500	N/A	N/A
HPSI-O2420YC	HPSI-2420YC	6.93×2.57×3	40ft container	15600	25600	N/A	N/A
HPSI-O2750YC	HPSI-2750YC	7.6×3×3.1	40ft container	18750	28750	N/A	N/A
HPSI-O3000YC	HPSI-3000YC	7.6×3×3.15	40ft container	18930	28930	N/A	N/A

Remark: An optional external fuel tank can be customized as per customer's requirements

Product Specification Sheet

60 Hz | 3P 4W | 220V 440V | Pf 0.8

GENERATING SETS POWERED BY YUCHAI ENGINE									
Genset Model		Prime Power		Standby Power		Engine Model	NO.of Cylinder	Displac-ement	Rated Fuel Consum-ption@100%Load	Lub Oil Capacity
Open Type	Silent Type	kW	kVA	kW	kVA			L	L/h	L
HPSI-O25YC	HPSI-25YC	18	23	20	25	YC4F40-D20	4	2.66	6.7	8
HPSI-O41YC	HPSI-41YC	30	38	33	41	YC4D65-D20	4	4.214	10.7	13
HPSI-O62YC	HPSI-62YC	45	56	50	62	YC4D80Z-D20	4	4.214	13.1	13
HPSI-O76YC	HPSI-76YC	55	69	61	76	YC4D100Z-D20	4	4.214	15.7	13
HPSI-O88YC	HPSI-88YC	64	80	70	88	YC6B115Z-D20	6	6.871	18.8	17
HPSI-O103YC	HPSI-103YC	75	94	83	103	YC6B130Z-D20	6	6.871	21.2	17
HPSI-O125YC	HPSI-125YC	90	113	100	125	YC6B160Z-D20	6	6.871	25.7	17
HPSI-O165YC	HPSI-165YC	120	150	132	165	YC6B210L-D20	6	6.871	33.3	17
HPSI-O188YC	HPSI-188YC	140	175	150	188	YC6A245L-D20	6	7.252	37.7	22
HPSI-O220YC	HPSI-220YC	160	200	176	220	YC6MK265Z-D20	6	10.338	41	28
HPSI-O275YC	HPSI-275YC	200	250	220	275	YC6MK360L-D20	6	10.338	55.7	28
HPSI-O300YC	HPSI-300YC	220	275	240	300	YC6MK380L-D20	6	10.338	58.2	28
HPSI-O344YC	HPSI-344YC	250	313	275	344	YC6MK420L-D21	6	10.338	65.2	28
HPSI-O550YC	HPSI-550YC	400	500	440	550	YC6T660L-D21	6	16.35	102.4	52

Specification subject to change without prior note

60 Hz | 3P 4W | 220V 440V | Pf 0.8

YUCHAI

TRANSPORTATION DATA							
Genset Model		Dimensions LxWxH(m)		Weight(kg)		Fuel Tank Capacity(L)	
Open Type	Silent Type	Open Type	Silent Type	Open Type	Silent Type	Open Type	Silent Type
HPSI-O25YC	HPSI-25YC	1.7×0.8×1.2	2.3×1.1×1.24	740	1100	115	135
HPSI-O41YC	HPSI-41YC	1.8×0.85×1.25	2.3×1.1×1.29	760	1120	135	135
HPSI-O62YC	HPSI-62YC	1.9×0.85×1.25	2.3×1.1×1.29	870	1240	135	135
HPSI-O76YC	HPSI-76YC	1.9×0.85×1.25	2.3×1.1×1.29	890	1260	135	135
HPSI-O88YC	HPSI-88YC	2.2×1.05×1.45	2.8×1.1×1.6	1320	1790	270	230
HPSI-O103YC	HPSI-103YC	2.2×1.05×1.45	2.8×1.1×1.6	1380	1850	270	230
HPSI-O125YC	HPSI-125YC	2.2×1.05×1.45	2.8×1.1×1.6	1430	1900	270	230
HPSI-O165YC	HPSI-165YC	2.4×1.05×1.47	2.8×1.1×1.6	1530	1970	280	230
HPSI-O188YC	HPSI-188YC	2.55×1.05×1.5	3.0×1.2×1.8	1680	2230	310	380
HPSI-O220YC	HPSI-220YC	2.8×1.05×1.85	3.8×1.3×1.85	1860	2700	400	400
HPSI-O275YC	HPSI-275YC	2.9×1.15×1.8	4.2×1.5×2.1	2470	3600	500	770
HPSI-O300YC	HPSI-300YC	2.9×1.15×1.8	4.2×1.5×2.1	2470	3600	500	770
HPSI-O344YC	HPSI-344YC	3.1×1.15×1.85	4.2×1.5×2.1	2680	3780	560	770
HPSI-O550YC	HPSI-550YC	3.5×1.35×2.1	4.8×1.9×2.28	4150	5200	680	1212

Remark: An optional external fuel tank can be customized as per customer's requirements

Product Specification Sheet

50 Hz | 3P 4W | 400 V | Pf 0.8

GENERATING SETS POWERED BY YANGDONG ENGINE

Genset Model		Prime Power		Standby Power		Engine Model	NO.of Cylinder	Displac-ement	Rated Fuel Consum-ption@100%Load	Lub Oil Capacity
Open Type	Silent Type	kW	kVA	kW	kVA			L	L/h	L
HPSI-O10YD	HPSI-10YD	7	9	8	10	YD380D	3	1.357	3.1	5.5
HPSI-O11YD	HPSI-11YD	8	10	9	11	YD385D	3	1.532	3.3	5.5
HPSI-O14YD	HPSI-14YD	10	13	11	14	YD480D	4	1.809	4.2	6.5
HPSI-O15YD	HPSI-15YD	11	14	12	15	YD4KD	4	2.043	4.4	6.5
HPSI-O17YD	HPSI-17YD	12	15	13	17	YND485D	4	2.156	5	6.5
HPSI-O21YD	HPSI-21YD	15	19	17	21	YND490D	4	2.417	5.9	6.5
HPSI-O22YD	HPSI-22YD	16	20	18	22	YSD490D	4	2.54	5.9	7.5
HPSI-O25YD	HPSI-25YD	18	23	20	25	Y490PD	4	2.67	7	7.5
HPSI-O28YD	HPSI-28YD	20	25	22	28	Y495D	4	2.997	7.7	7.5
HPSI-O30YD	HPSI-30YD	22	28	24	30	Y4100D	4	3.707	8.5	8.2
HPSI-O33YD	HPSI-33YD	24	30	26	33	Y4102D	4	3.875	9.2	8.2
HPSI-O40YD	HPSI-40YD	29	36	32	40	Y4105D	4	4.1	10.5	8.5
HPSI-O41YD	HPSI-41YD	30	38	33	41	Y4102ZD	4	3.875	11	8.5
HPSI-O50YD	HPSI-50YD	36	45	40	50	Y4102ZLD	4	3.875	12.9	8.5
HPSI-O55YD	HPSI-55YD	40	50	44	55	Y4105ZLD	4	4.1	14.4	8.5
HPSI-O66YD	HPSI-66YD	48	60	53	66	YD4EZLD	4	4.1	16.4	9

60 Hz | 3P 4W | 220V 440V | Pf 0.8

GENERATING SETS POWERED BY YANGDONG ENGINE

Genset Model		Prime Power		Standby Power		Engine Model	NO.of Cylinder	Displac-ement	Rated Fuel Consum-ption@100%Load	Lub Oil Capacity
Open Type	Silent Type	kW	kVA	kW	kVA			L	L/h	L
HPSI-O12YD	HPSI-12YD	9	11	10	12	YD380D	3	1.357	3.7	5.5
HPSI-O14YD	HPSI-14YD	10	13	11	14	YD385D	3	1.532	3.9	5.5
HPSI-O17YD	HPSI-17YD	12	15	13	17	YD480D	4	1.809	4.8	6.5
HPSI-O21YD	HPSI-21YD	15	19	17	21	YD4KD	4	2.043	5.3	6.5
HPSI-O22YD	HPSI-22YD	16	20	18	22	YND485D	4	2.156	5.9	6.5
HPSI-O25YD	HPSI-25YD	18	23	20	25	YND490D	4	2.417	7	6.5
HPSI-O26YD	HPSI-26YD	19	24	21	26	YSD490D	4	2.54	7	7.5
HPSI-O30YD	HPSI-30YD	22	28	24	30	Y490PD	4	2.67	7.8	7.5
HPSI-O33YD	HPSI-33YD	24	30	26	33	Y495D	4	2.997	8.6	7.5
HPSI-O34YD	HPSI-34YD	25	31	28	34	Y4100D	4	3.707	9.3	8.2
HPSI-O41YD	HPSI-41YD	30	38	33	41	Y4102D	4	3.875	10.9	8.2
HPSI-O47YD	HPSI-47YD	34	43	37	47	Y4105D	4	4.1	12.4	8.5
HPSI-O50YD	HPSI-50YD	36	45	40	50	Y4102ZD	4	3.875	13.1	8.5
HPSI-O55YD	HPSI-55YD	40	50	44	55	Y4102ZLD	4	3.875	14.2	8.5
HPSI-O62YD	HPSI-62YD	45	56	50	62	Y4105ZLD	4	4.1	15.7	8.5
HPSI-O77YD	HPSI-77YD	56	70	62	77	YD4EZLD	4	4.1	17.6	9

Specification subject to change without prior note

50 Hz | 3P 4W | 400 V | Pf 0.8

YangDong

TRANSPORTATION DATA

Genset Model		Dimensions LxWxH(m)		Weight(kg)		Fuel Tank Capacity(L)	
Open Type	Silent Type	Open Type	Silent Type	Open Type	Silent Type	Open Type	Silent Type
HPSI-O10YD	HPSI-10YD	1.3×0.8×1.2	1.8×1×1.18	400	770	70	100
HPSI-O11YD	HPSI-11YD	1.3×0.8×1.2	1.8×1×1.18	400	770	70	100
HPSI-O14YD	HPSI-14YD	1.3×0.8×1.2	1.8×1×1.18	430	800	70	100
HPSI-O15YD	HPSI-15YD	1.3×0.8×1.2	1.8×1×1.18	430	800	70	100
HPSI-O17YD	HPSI-17YD	1.3×0.8×1.2	1.8×1×1.18	440	810	70	100
HPSI-O21YD	HPSI-21YD	1.4×0.85×1.2	1.9×1×1.18	550	870	80	110
HPSI-O22YD	HPSI-22YD	1.4×0.85×1.2	1.9×1×1.18	550	870	80	110
HPSI-O25YD	HPSI-25YD	1.4×0.85×1.2	1.9×1×1.18	550	870	80	110
HPSI-O28YD	HPSI-28YD	1.4×0.85×1.2	1.9×1×1.18	580	900	80	110
HPSI-O30YD	HPSI-30YD	1.65×0.85×1.2	2.3×1.1×1.24	670	1050	130	130
HPSI-O33YD	HPSI-33YD	1.65×0.85×1.2	2.3×1.1×1.24	690	1070	130	130
HPSI-O40YD	HPSI-40YD	1.65×0.85×1.2	2.3×1.1×1.24	770	1150	130	130
HPSI-O41YD	HPSI-41YD	1.65×0.85×1.2	2.3×1.1×1.24	780	1160	130	130
HPSI-O50YD	HPSI-50YD	1.8×0.85×1.25	2.3×1.1×1.24	850	1210	145	130
HPSI-O55YD	HPSI-55YD	1.8×0.85×1.25	2.3×1.1×1.24	860	1220	145	130
HPSI-O66YD	HPSI-66YD	1.8×0.85×1.25	2.3×1.1×1.24	900	1260	145	130

60 Hz | 3P 4W | 220V 440V | Pf 0.8

TRANSPORTATION DATA

Genset Model		Dimensions LxWxH(m)		Weight(kg)		Fuel Tank Capacity(L)	
Open Type	Silent Type	Open Type	Silent Type	Open Type	Silent Type	Open Type	Silent Type
HPSI-O12YD	HPSI-12YD	1.3×0.8×1.2	1.8×1×1.18	400	770	70	100
HPSI-O14YD	HPSI-14YD	1.3×0.8×1.2	1.8×1×1.18	400	770	70	100
HPSI-O17YD	HPSI-17YD	1.3×0.8×1.2	1.8×1×1.18	430	800	70	100
HPSI-O21YD	HPSI-21YD	1.3×0.8×1.2	1.8×1×1.18	430	800	70	100
HPSI-O22YD	HPSI-22YD	1.3×0.8×1.2	1.8×1×1.18	440	810	70	100
HPSI-O25YD	HPSI-25YD	1.4×0.85×1.2	1.9×1×1.18	550	870	80	110
HPSI-O26YD	HPSI-26YD	1.4×0.85×1.2	1.9×1×1.18	550	870	80	110
HPSI-O30YD	HPSI-30YD	1.4×0.85×1.2	1.9×1×1.18	550	870	80	110
HPSI-O33YD	HPSI-33YD	1.4×0.85×1.2	1.9×1×1.18	580	900	80	110
HPSI-O34YD	HPSI-34YD	1.65×0.85×1.2	2.3×1.1×1.24	670	1050	130	130
HPSI-O41YD	HPSI-41YD	1.65×0.85×1.2	2.3×1.1×1.24	690	1070	130	130
HPSI-O47YD	HPSI-47YD	1.65×0.85×1.2	2.3×1.1×1.24	770	1150	130	130
HPSI-O50YD	HPSI-50YD	1.65×0.85×1.2	2.3×1.1×1.24	780	1160	130	130
HPSI-O55YD	HPSI-55YD	1.8×0.85×1.25	2.3×1.1×1.24	810	1170	145	130
HPSI-O62YD	HPSI-62YD	1.8×0.85×1.25	2.3×1.1×1.24	860	1220	145	130
HPSI-O77YD	HPSI-77YD	1.8×0.85×1.25	2.3×1.1×1.24	900	1260	145	130

Remark: An optional external fuel tank can be customized as per customer's requirements

Product Specification Sheet

50 Hz | 3P 4W | 400 V | Pf 0.8

GENERATING SETS POWERED BY WEICHAI ENGINE

Genset Model		Prime Power		Standby Power		Engine Model	NO.of Cylinder	Displac-ement	Rated Fuel Consum-ption@100%Load	Lub Oil Capacity
Open Type	Silent Type	kW	kVA	kW	kVA			L	L/h	L
HPSI-O25W	HPSI-25W	18	22.5	20	25	WP2.3D25E200	4	2.289	6.67	8
HPSI-O35W	HPSI-35W	26	32.5	28	35	WP2.3D33E200	4	2.289	8.31	8
HPSI-O41W	HPSI-41W	30	37.5	33	41.25	WP2.3D40E200	4	2.289	10.29	8
HPSI-O50W	HPSI-50W	36	45	40	50	WP2.3D48E200	4	2.289	12.57	8
HPSI-O68W	HPSI-68W	50	62.5	55	68.75	WP4.1D66E200	4	4.088	18.46	13
HPSI-O87W	HPSI-87W	64	80	70	87.5	WP4.1D80E200	4	4.088	22.38	13
HPSI-O110W	HPSI-110W	80	100	88	110	WP4.1D100E200	4	4.088	25	13
HPSI-O125W	HPSI-125W	90	112.5	100	125	WP4.1D113E200	4	4.088	28.25	13
HPSI-O150W	HPSI-150W	100	125	120	150	WP6D132E200	6	6.75	32.21	18
HPSI-O165W	HPSI-165W	120	150	132	165	WP6D152E200	6	6.75	37.1	18
HPSI-O187W	HPSI-187W	136	170	150	187.5	WP6D167E200	6	6.75	41.35	18
HPSI-O220W	HPSI-220W	160	200	176	220	WP10D200E200	6	9.726	47.62	24
HPSI-O250W	HPSI-250W	184	230	200	250	WP10D238E200	6	9.726	57.23	24
HPSI-O275W	HPSI-275W	200	250	220	275	WP10D264E200	6	9.726	64.43	24
HPSI-O350W	HPSI-350W	250	312.5	280	350	WP10D320E200	6	9.726	79.24	24
HPSI-O412W	HPSI-412W	300	375	330	412.5	WP12D353E200	6	11.596	87.41	28
HPSI-O437W	HPSI-437W	320	400	350	437.5	WP13D405E200	6	12.54	101.25	30
HPSI-O625W	HPSI-625W	450	562.5	500	625	6M33D572E200	6	33	144.36	65
HPSI-O725W	HPSI-725W	520	650	580	725	6M33D633E200	6	33	159.76	65
HPSI-O750W	HPSI-750W	540	675	600	750	6M33D670E200	6	33	169.1	65
HPSI-O875W	HPSI-875W	640	800	700	875	8M33D800E200	8	44	204.76	85
HPSI-O1000W	HPSI-1000W	720	900	800	1000	8M33D895E200	8	44	229.08	85
HPSI-O1100W	HPSI-1100W	800	1000	880	1100	12M26D968E200	12	31.8	226.1	55
HPSI-O1250W	HPSI-1250W	900	1125	1000	1250	12M33D1108E200	12	39.2	270.45	68
HPSI-O1375W	HPSI-1375W	1000	1250	1100	1375	12M33D1210E200	12	39.2	295.42	68
HPSI-O1500W	HPSI-1500W	1100	1375	1200	1500	12M33D1320E200	12	39.2	322.14	68
HPSI-O1650W	HPSI-1650W	1200	1500	1320	1650	12M33D1500E310	12	39.2	371.43	68
HPSI-O1800W	HPSI-1800W	1300	1625	1440	1800	16M33D1580E310	16	52.3	391.24	88
HPSI-O1900W	HPSI-1900W	1400	1750	1520	1900	16M33D1680E310	16	52.3	416	88
HPSI-O2062W	HPSI-2062W	1500	1875	1650	2062.5	16M33D1800E310	16	52.3	445.71	88
HPSI-O2250W	HPSI-2250W	1600	2000	1800	2250	16M33D1980E310	16	52.3	490.29	88
HPSI-O2500W	HPSI-2500W	1800	2250	2000	2500	20M33D2210E310	20	65.4	552.5	110
HPSI-O2750W	HPSI-2750W	2000	2500	2200	2750	12M55D2450E310	12	65.65	597.02	105
HPSI-O3000W	HPSI-3000W	2200	2750	2400	3000	12M55D2700E310	12	65.65	658.04	105
HPSI-O3125W	HPSI-3125W	2250	2812.5	2500	3125	16M55D2750E310	16	87.5	680.95	135
HPSI-O3312W	HPSI-3312W	2400	3000	2650	3312.5	16M55D2900E310	16	87.5	718.1	135
HPSI-O3750W	HPSI-3750W	2600	3250	3000	3750	16M55D3300E310	16	87.5	817.14	135
HPSI-O4125W	HPSI-4125W	3000	3750	3300	4125	16M55D3600E310	16	87.5	891.43	135

Specification subject to change without prior note

50 Hz | 3P 4W | 400 V | Pf 0.8

WEICHAI

TRANSPORTATION DATA

Genset Model		Dimensions LxWxH(m)		Weight(kg)		Fuel Tank Capacity(L)	
Open Type	Silent Type	Open Type	Silent Type	Open Type	Silent Type	Open Type	Silent Type
HPSI-O25W	HPSI-25W	1.7×0.7×1.12	2.2×1×1.3	350	490	55	55
HPSI-O35W	HPSI-35W	1.72×0.71×1.13	2.3×1×1.3	365	505	55	55
HPSI-O41W	HPSI-41W	1.78×0.73×1.16	2.4×1×1.3	400	545	60	60
HPSI-O50W	HPSI-50W	1.82×0.76×1.19	2.5×1×1.3	440	595	65	65
HPSI-O68W	HPSI-68W	2.05×0.82×1.22	2.5×1×1.3	520	710	85	85
HPSI-O87W	HPSI-87W	2.1×0.85×1.25	2.7×1×1.45	580	780	90	90
HPSI-O110W	HPSI-110W	2.12×0.87×1.27	2.7×1×1.45	610	815	92	92
HPSI-O125W	HPSI-125W	2.18×0.89×1.29	3×1.1×1.6	650	860	95	95
HPSI-O150W	HPSI-150W	2.85×1.15×1.65	3.2×1.1×1.6	1250	1680	180	180
HPSI-O165W	HPSI-165W	2.88×1.17×1.67	3.2×1.1×1.6	1290	1720	180	180
HPSI-O187W	HPSI-187W	2.92×1.19×1.69	3.4×1.4×1.8	1350	1790	185	185
HPSI-O220W	HPSI-220W	3.35×1.3×1.9	3.7×1.4×1.8	2450	3120	300	300
HPSI-O250W	HPSI-250W	3.56×1.42×2.05	3.7×1.4×1.8	4885	5850	350	350
HPSI-O275W	HPSI-275W	4.08×1.715×2	3.7×1.4×1.8	5650	6720	380	380
HPSI-O350W	HPSI-350W	4.18×1.73×2.08	4×1.45×2	6200	7350	420	420
HPSI-O412W	HPSI-412W	4.25×1.75×2.1	4.0×1.6×2.25	6850	8150	450	450
HPSI-O437W	HPSI-437W	4.35×1.8×2.15	4.2×1.6×2.25	7200	8550	480	480
HPSI-O625W	HPSI-625W	4.6×2.02×2.32	4.8×1.8×2.3	8300	10050	580	580
HPSI-O725W	HPSI-725W	4.7×2.05×2.35	4.8×1.8×2.3	8800	10600	600	600
HPSI-O750W	HPSI-750W	4.75×2.08×2.38	4.8×1.8×2.3	9200	11050	620	620
HPSI-O875W	HPSI-875W	4.95×2.15×2.48	5.5×2/2.25/2.5	10500	12800	700	700
HPSI-O1000W	HPSI-1000W	5.1×2.18×2.52	5.5×2/2.25/2.5	11200	13500	750	750
HPSI-O1100W	HPSI-1100W	5.2×2.2×2.6	20尺柜/40尺柜	/	14200	800	800
HPSI-O1250W	HPSI-1250W	5.25×2.25×2.63	20尺柜/40尺柜	12300	14750	820	820
HPSI-O1375W	HPSI-1375W	5.3×2.28×2.65	20尺柜/40尺柜	12800	15300	850	850
HPSI-O1500W	HPSI-1500W	5.5×2.3×2.7	20尺柜/40尺柜	13500	16200	900	900
HPSI-O1650W	HPSI-1650W	5.65×2.35×2.75	40尺柜	14300	17100	950	950
HPSI-O1800W	HPSI-1800W	5.8×2.4×2.8	40尺柜	15200	18200	1000	1000
HPSI-O1900W	HPSI-1900W	5.9×2.45×2.83	40尺柜	15800	18900	1050	1050
HPSI-O2062W	HPSI-2062W	6×2.5×2.88	40尺柜	16500	19800	1100	1100
HPSI-O2250W	HPSI-2250W	6.3×2.6×3	40尺柜	18800	22600	1200	1200
HPSI-O2500W	HPSI-2500W	6.45×2.65×3.05	40尺柜	19600	23500	1250	1250
HPSI-O2750W	HPSI-2750W	6.8×2.8×3.2	40尺柜	22800	27400	1400	1400
HPSI-O3000W	HPSI-3000W	6.9×2.85×3.23	40尺柜	23600	28300	1450	1450
HPSI-O3125W	HPSI-3125W	7×2.88×3.28	定制柜	24500	29400	1500	1500
HPSI-O3312W	HPSI-3312W	7.2×2.95×3.35	定制柜	26800	32200	1600	1600
HPSI-O3750W	HPSI-3750W	7.3×2.98×3.38	定制柜	27800	33400	1620	1620
HPSI-O4125W	HPSI-4125W	7.35×3×3.4	定制柜	28500	34200	1650	1650

Remark: An optional external fuel tank can be customized as per customer's requirements

Product Specification Sheet

60 Hz | 3P 4W | 220V 440V | Pf 0.8

GENERATING SETS POWERED BY WEICHAI ENGINE

Genset Model		Prime Power		Standby Power		Engine Model	NO.of Cylinder	Displac-ement	Rated Fuel Consum-ption@100%Load	Lub Oil Capacity
Open Type	Silent Type	kW	kVA	kW	kVA			L	L/h	L
HPSI-O31W	HPSI-31W	22	27.5	25	31.25	WP2.3D30E201	4	2.29	7.2	8
HPSI-O46W	HPSI-46W	30	37.5	37	46.25	WP2.3D41E201	4	2.29	9.8	8
HPSI-O51W	HPSI-51W	36	45	41	51.25	WP2.3D47E201	4	2.29	11.2	8
HPSI-O63W	HPSI-63W	45	56.25	50	62.5	WP2.3D58E201	4	2.29	13.8	8
HPSI-O88W	HPSI-88W	64	80	70	87.5	WP4.1D80E201	4	4.087	19.2	12
HPSI-O109W	HPSI-109W	78	97.5	87	108.75	WP4.1D95E201	4	4.087	22.8	12
HPSI-O136W	HPSI-136W	96	120	109	136.25	WP4.1D120E201	4	4.087	28.8	12
HPSI-O140W	HPSI-140W	100	125	112	140	WP6D132E201	6	6.23	31.7	18
HPSI-O175W	HPSI-175W	130	162.5	140	175	WP6D158E201	6	6.23	37.9	18
HPSI-O208W	HPSI-208W	144	180	166	207.5	WP6D180E201	6	6.23	43.2	18
HPSI-O223W	HPSI-223W	160	200	178	222.5	WP10D200E201	6	9.726	48	28
HPSI-O258W	HPSI-258W	184	230	206	257.5	WP10D238E201	6	9.726	57.1	28
HPSI-O280W	HPSI-280W	200	250	224	280	WP10D264E201	6	9.726	63.4	28
HPSI-O399W	HPSI-399W	300	375	319	398.75	WP10D360E201	6	9.726	86.4	28
HPSI-O419W	HPSI-419W	300	375	335	418.75	WP13D385E201	6	12.54	92.4	32
HPSI-O500W	HPSI-500W	380	475	400	500	WP13D448E201	6	12.54	107.5	32
HPSI-O704W	HPSI-704W	520	650	563	703.75	6M33D633E201	6	32.8	151.9	95
HPSI-O769W	HPSI-769W	540	675	615	768.75	6M33D670E201	6	32.8	160.8	95
HPSI-O800W	HPSI-800W	580	725	640	800	6M33D710E201	6	32.8	170.4	95
HPSI-O1028W	HPSI-1028W	720	900	822	1027.5	12M26D902E201	12	25.8	216.5	85
HPSI-O1140W	HPSI-1140W	850	1062.5	912	1140	12M26D1012E201	12	25.8	242.9	85
HPSI-O1448W	HPSI-1448W	1000	1250	1158	1447.5	12M33D1265E201	12	65.6	303.6	190
HPSI-O1525W	HPSI-1525W	1100	1375	1220	1525	12M33D1320E201	12	65.6	316.8	190
HPSI-O1650W	HPSI-1650W	1200	1500	1320	1650	12M33D1420E201	12	65.6	340.8	190
HPSI-O1875W	HPSI-1875W	1400	1750	1500	1875	16M33D1680E311	16	87.5	403.2	255
HPSI-O2000W	HPSI-2000W	1500	1875	1600	2000	16M33D1785E311	16	87.5	428.4	255
HPSI-O2125W	HPSI-2125W	1600	2000	1700	2125	16M33D1920E311	16	87.5	460.8	255
HPSI-O2500W	HPSI-2500W	1800	2250	2000	2500	20M33D2230E311	20	109.4	535.2	320
HPSI-O2750W	HPSI-2750W	2000	2500	2200	2750	20M33D2460E311	20	109.4	590.4	320
HPSI-O3000W	HPSI-3000W	2200	2750	2400	3000	12M55D2700E311	12	112	648	380
HPSI-O3375W	HPSI-3375W	2450	3062.5	2700	3375	16M55D2960E311	16	149.3	710.4	480
HPSI-O3438W	HPSI-3438W	2500	3125	2750	3437.5	16M55D3150E311	16	149.3	756	480
HPSI-O3750W	HPSI-3750W	2600	3250	3000	3750	16M55D3350E311	16	149.3	804	480
HPSI-O4125W	HPSI-4125W	3000	3750	3300	4125	16M55D3600E311	16	149.3	864	480

Specification subject to change without prior note

60 Hz | 3P 4W | 220V 440V | Pf 0.8

WEICHAI

TRANSPORTATION DATA

Genset Model		Dimensions LxWxH(m)		Weight(kg)		Fuel Tank Capacity(L)	
Open Type	Silent Type	Open Type	Silent Type	Open Type	Silent Type	Open Type	Silent Type
HPSI-O31W	HPSI-31W	1.75×0.72×1.15	2.2×1×1.3	380	520	60	60
HPSI-O46W	HPSI-46W	1.8×0.75×1.18	2.3×1×1.3	420	570	65	65
HPSI-O51W	HPSI-51W	1.8×0.75×1.18	2.4×1×1.3	435	585	65	65
HPSI-O63W	HPSI-63W	1.85×0.78×1.2	2.5×1×1.3	460	620	70	70
HPSI-O88W	HPSI-88W	2.1×0.85×1.25	2.5×1×1.3	580	780	90	90
HPSI-O109W	HPSI-109W	2.15×0.88×1.28	2.7×1×1.45	630	840	95	95
HPSI-O136W	HPSI-136W	2.2×0.9×1.3	3×1.1×1.6	680	900	100	100
HPSI-O140W	HPSI-140W	2.85×1.15×1.65	3.2×1.1×1.6	1250	1680	180	180
HPSI-O175W	HPSI-175W	2.9×1.18×1.68	3.2×1.1×1.6	1320	1750	180	180
HPSI-O208W	HPSI-208W	3.2×1.25×1.85	3.4×1.4×1.8	2150	2780	280	280
HPSI-O223W	HPSI-223W	3.35×1.3×1.9	3.7×1.4×1.8	2450	3120	300	300
HPSI-O258W	HPSI-258W	3.56×1.42×2.05	3.7×1.4×1.8	4885	5850	350	350
HPSI-O280W	HPSI-280W	4.08×1.715×2	3.7×1.4×1.8	5650	6720	380	380
HPSI-O399W	HPSI-399W	4.25×1.75×2.1	4×1.45×2	6850	8150	450	450
HPSI-O419W	HPSI-419W	4.35×1.8×2.15	4.0×1.6×2.25	7200	8550	480	480
HPSI-O500W	HPSI-500W	4.45×1.85×2.2	4.2×1.6×2.25	7600	8950	500	500
HPSI-O704W	HPSI-704W	4.7×2.05×2.35	4.8×1.8×2.3	8800	10600	600	600
HPSI-O769W	HPSI-769W	4.75×2.08×2.38	4.8×1.8×2.3	9200	11050	620	620
HPSI-O800W	HPSI-800W	4.8×2.1×2.4	4.8×1.8×2.3	9500	11400	650	650
HPSI-O1028W	HPSI-1028W	5.2×2.2×2.6	20尺柜/40尺柜	11800	14200	800	800
HPSI-O1140W	HPSI-1140W	5.25×2.25×2.63	20尺柜/40尺柜	12300	14750	820	820
HPSI-O1448W	HPSI-1448W	5.3×2.28×2.65	20尺柜/40尺柜	12800	15300	850	850
HPSI-O1525W	HPSI-1525W	5.5×2.3×2.7	20尺柜/40尺柜	13500	16200	900	900
HPSI-O1650W	HPSI-1650W	5.65×2.35×2.75	20尺柜/40尺柜	14300	17100	950	950
HPSI-O1875W	HPSI-1875W	5.8×2.4×2.8	40尺柜	15200	18200	1000	1000
HPSI-O2000W	HPSI-2000W	5.9×2.45×2.83	40尺柜	15800	18900	1050	1050
HPSI-O2125W	HPSI-2125W	6×2.5×2.88	40尺柜	16500	19800	1100	1100
HPSI-O2500W	HPSI-2500W	6.3×2.6×3	40尺柜	18800	22600	1200	1200
HPSI-O2750W	HPSI-2750W	6.45×2.65×3.05	40尺柜	19600	23500	1250	1250
HPSI-O3000W	HPSI-3000W	6.8×2.8×3.2	40尺柜	22800	27400	1400	1400
HPSI-O3375W	HPSI-3375W	6.9×2.85×3.23	定制柜	23600	28300	1450	1450
HPSI-O3438W	HPSI-3438W	7×2.88×3.28	定制柜	24500	29400	1500	1500
HPSI-O3750W	HPSI-3750W	7.2×2.95×3.35	定制柜	26800	32200	1600	1600
HPSI-O4125W	HPSI-4125W	7.35×3×3.4	定制柜	28500	34200	1650	1650

Remark: An optional external fuel tank can be customized as per customer's requirements

Product Specification Sheet

50 Hz | 3P 4W | 400 V | Pf 0.8

GENERATING SETS POWERED BY HPSI ENGINE

Genset Model		Prime Power		Standby Power		Engine Power KW	NO.of Cylinder	Displac-ement	Rated Fuel Consum-ption@100%Load	Lub Oil Capacity
Open Type	Silent Type	kW	kVA	kW	kVA			L	L/h	L
HPSI-O25G	HPSI-25G	18	22.5	20	25	25	4	2.289	6.67	8
HPSI-O35G	HPSI-35G	26	32.5	28	35	33	4	2.289	8.31	8
HPSI-O41G	HPSI-41G	30	37.5	33	41.25	40	4	2.289	10.29	8
HPSI-O50G	HPSI-50G	36	45	40	50	48	4	2.289	12.57	8
HPSI-O68G	HPSI-68G	50	62.5	55	68.75	66	4	4.088	18.46	13
HPSI-O87G	HPSI-87G	64	80	70	87.5	80	4	4.088	22.38	13
HPSI-O110G	HPSI-110G	80	100	88	110	100	4	4.088	25	13
HPSI-O125G	HPSI-125G	90	112.5	100	125	113	4	4.088	28.25	13
HPSI-O150G	HPSI-150G	100	125	120	150	132	6	6.75	32.21	18
HPSI-O165G	HPSI-165G	120	150	132	165	152	6	6.75	37.1	18
HPSI-O187G	HPSI-187G	136	170	150	187.5	167	6	6.75	41.35	18
HPSI-O220G	HPSI-220G	160	200	176	220	200	6	9.726	47.62	24
HPSI-O250G	HPSI-250G	184	230	200	250	238	6	9.726	57.23	24
HPSI-O275G	HPSI-275G	200	250	220	275	264	6	9.726	64.43	24
HPSI-O350G	HPSI-350G	250	312.5	280	350	320	6	9.726	79.24	24
HPSI-O412G	HPSI-412G	300	375	330	412.5	353	6	11.596	87.41	28
HPSI-O437G	HPSI-437G	320	400	350	437.5	405	6	12.54	101.25	30
HPSI-O625G	HPSI-625G	450	562.5	500	625	572	6	33	144.36	65
HPSI-O725G	HPSI-725G	520	650	580	725	633	6	33	159.76	65
HPSI-O750G	HPSI-750G	540	675	600	750	670	6	33	169.1	65
HPSI-O875G	HPSI-875G	640	800	700	875	800	8	44	204.76	85
HPSI-O1000G	HPSI-1000G	720	900	800	1000	895	8	44	229.08	85
HPSI-O1100G	HPSI-1100G	800	1000	880	1100	968	12	31.8	226.1	55
HPSI-O1250G	HPSI-1250G	900	1125	1000	1250	1108	12	39.2	270.45	68
HPSI-O1375G	HPSI-1375G	1000	1250	1100	1375	1210	12	39.2	295.42	68
HPSI-O1500G	HPSI-1500G	1100	1375	1200	1500	1320	12	39.2	322.14	68
HPSI-O1650G	HPSI-1650G	1200	1500	1320	1650	1500	12	39.2	371.43	68
HPSI-O1800G	HPSI-1800G	1300	1625	1440	1800	1580	16	52.3	391.24	88
HPSI-O1900G	HPSI-1900G	1400	1750	1520	1900	1680	16	52.3	416	88
HPSI-O2062G	HPSI-2062G	1500	1875	1650	2062.5	1800	16	52.3	445.71	88
HPSI-O2250G	HPSI-2250G	1600	2000	1800	2250	1980	16	52.3	490.29	88
HPSI-O2500G	HPSI-2500G	1800	2250	2000	2500	2210	20	65.4	552.5	110
HPSI-O2750G	HPSI-2750G	2000	2500	2200	2750	2450	12	65.65	597.02	105
HPSI-O3000G	HPSI-3000G	2200	2750	2400	3000	2700	12	65.65	658.04	105
HPSI-O3125G	HPSI-3125G	2250	2812.5	2500	3125	2750	16	87.5	680.95	135
HPSI-O3312G	HPSI-3312G	2400	3000	2650	3312.5	2900	16	87.5	718.1	135
HPSI-O3750G	HPSI-3750G	2600	3250	3000	3750	3300	16	87.5	817.14	135
HPSI-O4125G	HPSI-4125G	3000	3750	3300	4125	3600	16	87.5	891.43	135

Specification subject to change without prior note

50 Hz | 3P 4W | 400 V | Pf 0.8

HPSI

TRANSPORTATION DATA

Genset Model		Dimensions LxWxH(m)		Weight(kg)		Fuel Tank Capacity(L)	
Open Type	Silent Type	Open Type	Silent Type	Open Type	Silent Type	Open Type	Silent Type
HPSI-O25G	HPSI-25G	1.7×0.7×1.12	2.2×1×1.3	350	490	55	55
HPSI-O35G	HPSI-35G	1.72×0.71×1.13	2.3×1×1.3	365	505	55	55
HPSI-O41G	HPSI-41G	1.78×0.73×1.16	2.4×1×1.3	400	545	60	60
HPSI-O50G	HPSI-50G	1.82×0.76×1.19	2.5×1×1.3	440	595	65	65
HPSI-O68G	HPSI-68G	2.05×0.82×1.22	2.5×1×1.3	520	710	85	85
HPSI-O87G	HPSI-87G	2.1×0.85×1.25	2.7×1×1.45	580	780	90	90
HPSI-O110G	HPSI-110G	2.12×0.87×1.27	2.7×1×1.45	610	815	92	92
HPSI-O125G	HPSI-125G	2.18×0.89×1.29	3×1.1×1.6	650	860	95	95
HPSI-O150G	HPSI-150G	2.85×1.15×1.65	3.2×1.1×1.6	1250	1680	180	180
HPSI-O165G	HPSI-165G	2.88×1.17×1.67	3.2×1.1×1.6	1290	1720	180	180
HPSI-O187G	HPSI-187G	2.92×1.19×1.69	3.4×1.4×1.8	1350	1790	185	185
HPSI-O220G	HPSI-220G	3.35×1.3×1.9	3.7×1.4×1.8	2450	3120	300	300
HPSI-O250G	HPSI-250G	3.56×1.42×2.05	3.7×1.4×1.8	4885	5850	350	350
HPSI-O275G	HPSI-275G	4.08×1.715×2	3.7×1.4×1.8	5650	6720	380	380
HPSI-O350G	HPSI-350G	4.18×1.73×2.08	4×1.45×2	6200	7350	420	420
HPSI-O412G	HPSI-412G	4.25×1.75×2.1	4.0×1.6×2.25	6850	8150	450	450
HPSI-O437G	HPSI-437G	4.35×1.8×2.15	4.2×1.6×2.25	7200	8550	480	480
HPSI-O625G	HPSI-625G	4.6×2.02×2.32	4.8×1.8×2.3	8300	10050	580	580
HPSI-O725G	HPSI-725G	4.7×2.05×2.35	4.8×1.8×2.3	8800	10600	600	600
HPSI-O750G	HPSI-750G	4.75×2.08×2.38	4.8×1.8×2.3	9200	11050	620	620
HPSI-O875G	HPSI-875G	4.95×2.15×2.48	5.5×2/2.25/2.5	10500	12800	700	700
HPSI-O1000G	HPSI-1000G	5.1×2.18×2.52	5.5×2/2.25/2.5	11200	13500	750	750
HPSI-O1100G	HPSI-1100G	5.2×2.2×2.6	20尺柜/40尺柜		14200	800	800
HPSI-O1250G	HPSI-1250G	5.25×2.25×2.63	20尺柜/40尺柜	12300	14750	820	820
HPSI-O1375G	HPSI-1375G	5.3×2.28×2.65	20尺柜/40尺柜	12800	15300	850	850
HPSI-O1500G	HPSI-1500G	5.5×2.3×2.7	20尺柜/40尺柜	13500	16200	900	900
HPSI-O1650G	HPSI-1650G	5.65×2.35×2.75	40尺柜	14300	17100	950	950
HPSI-O1800G	HPSI-1800G	5.8×2.4×2.8	40尺柜	15200	18200	1000	1000
HPSI-O1900G	HPSI-1900G	5.9×2.45×2.83	40尺柜	15800	18900	1050	1050
HPSI-O2062G	HPSI-2062G	6×2.5×2.88	40尺柜	16500	19800	1100	1100
HPSI-O2250G	HPSI-2250G	6.3×2.6×3	40尺柜	18800	22600	1200	1200
HPSI-O2500G	HPSI-2500G	6.45×2.65×3.05	40尺柜	19600	23500	1250	1250
HPSI-O2750G	HPSI-2750G	6.8×2.8×3.2	40尺柜	22800	27400	1400	1400
HPSI-O3000G	HPSI-3000G	6.9×2.85×3.23	40尺柜	23600	28300	1450	1450
HPSI-O3125G	HPSI-3125G	7×2.88×3.28	定制柜	24500	29400	1500	1500
HPSI-O3312G	HPSI-3312G	7.2×2.95×3.35	定制柜	26800	32200	1600	1600
HPSI-O3750G	HPSI-3750G	7.3×2.98×3.38	定制柜	27800	33400	1620	1620
HPSI-O4125G	HPSI-4125G	7.35×3×3.4	定制柜	28500	34200	1650	1650

Remark: An optional external fuel tank can be customized as per customer's requirements

Product Specification Sheet

60 Hz | 3P 4W | 220V 440V | Pf 0.8

GENERATING SETS POWERED BY HPSI ENGINE

Genset Model		Prime Power		Standby Power		Engine Power KW	NO.of Cylinder	Displac-ement	Rated Fuel Consum-ption@100%Load	Lub Oil Capacity
Open Type	Silent Type	kW	kVA	kW	kVA			L	L/h	L
HPSI-O31G	HPSI-31G	22	27.5	25	31.25	30	4	2.29	7.2	8
HPSI-O46G	HPSI-46G	30	37.5	37	46.25	41	4	2.29	9.8	8
HPSI-O51G	HPSI-51G	36	45	41	51.25	47	4	2.29	11.2	8
HPSI-O63G	HPSI-63G	45	56.25	50	62.5	58	4	2.29	13.8	8
HPSI-O88G	HPSI-88G	64	80	70	87.5	80	4	4.087	19.2	12
HPSI-O109G	HPSI-109G	78	97.5	87	108.75	95	4	4.087	22.8	12
HPSI-O136G	HPSI-136G	96	120	109	136.25	120	4	4.087	28.8	12
HPSI-O140G	HPSI-140G	100	125	112	140	132	6	6.23	31.7	18
HPSI-O175G	HPSI-175G	130	162.5	140	175	158	6	6.23	37.9	18
HPSI-O208G	HPSI-208G	144	180	166	207.5	180	6	6.23	43.2	18
HPSI-O223G	HPSI-223G	160	200	178	222.5	200	6	9.726	48	28
HPSI-O258G	HPSI-258G	184	230	206	257.5	238	6	9.726	57.1	28
HPSI-O280G	HPSI-280G	200	250	224	280	264	6	9.726	63.4	28
HPSI-O399G	HPSI-399G	300	375	319	398.75	360	6	9.726	86.4	28
HPSI-O419G	HPSI-419G	300	375	335	418.75	385	6	12.54	92.4	32
HPSI-O500G	HPSI-500G	380	475	400	500	448	6	12.54	107.5	32
HPSI-O704G	HPSI-704G	520	650	563	703.75	633	6	32.8	151.9	95
HPSI-O769G	HPSI-769G	540	675	615	768.75	670	6	32.8	160.8	95
HPSI-O800G	HPSI-800G	580	725	640	800	710	6	32.8	170.4	95
HPSI-O1028G	HPSI-1028G	720	900	822	1027.5	902	12	25.8	216.5	85
HPSI-O1140G	HPSI-1140G	850	1062.5	912	1140	1012	12	25.8	242.9	85
HPSI-O1448G	HPSI-1448G	1000	1250	1158	1447.5	1265	12	65.6	303.6	190
HPSI-O1525G	HPSI-1525G	1100	1375	1220	1525	1320	12	65.6	316.8	190
HPSI-O1650G	HPSI-1650G	1200	1500	1320	1650	1420	12	65.6	340.8	190
HPSI-O1875G	HPSI-1875G	1400	1750	1500	1875	1680	16	87.5	403.2	255
HPSI-O2000G	HPSI-2000G	1500	1875	1600	2000	1785	16	87.5	428.4	255
HPSI-O2125G	HPSI-2125G	1600	2000	1700	2125	1920	16	87.5	460.8	255
HPSI-O2500G	HPSI-2500G	1800	2250	2000	2500	2230	20	109.4	535.2	320
HPSI-O2750G	HPSI-2750G	2000	2500	2200	2750	2460	20	109.4	590.4	320
HPSI-O3000G	HPSI-3000G	2200	2750	2400	3000	2700	12	112	648	380
HPSI-O3375G	HPSI-3375G	2450	3062.5	2700	3375	2960	16	149.3	710.4	480
HPSI-O3438G	HPSI-3438G	2500	3125	2750	3437.5	3150	16	149.3	756	480
HPSI-O3750G	HPSI-3750G	2600	3250	3000	3750	3350	16	149.3	804	480
HPSI-O4125G	HPSI-4125G	3000	3750	3300	4125	3600	16	149.3	864	480

Specification subject to change without prior note

60 Hz | 3P 4W | 220V 440V | Pf 0.8

HPSI

TRANSPORTATION DATA

Genset Model		Dimensions LxWxH(m)		Weight(kg)		Fuel Tank Capacity(L)	
Open Type	Silent Type	Open Type	Silent Type	Open Type	Silent Type	Open Type	Silent Type
HPSI-O31G	HPSI-31G	1.75×0.72×1.15	2.2×1×1.3	380	520	60	60
HPSI-O46G	HPSI-46G	1.8×0.75×1.18	2.3×1×1.3	420	570	65	65
HPSI-O51G	HPSI-51G	1.8×0.75×1.18	2.4×1×1.3	435	585	65	65
HPSI-O63G	HPSI-63G	1.85×0.78×1.2	2.5×1×1.3	460	620	70	70
HPSI-O88G	HPSI-88G	2.1×0.85×1.25	2.5×1×1.3	580	780	90	90
HPSI-O109G	HPSI-109G	2.15×0.88×1.28	2.7×1×1.45	630	840	95	95
HPSI-O136G	HPSI-136G	2.2×0.9×1.3	3×1.1×1.6	680	900	100	100
HPSI-O140G	HPSI-140G	2.85×1.15×1.65	3.2×1.1×1.6	1250	1680	180	180
HPSI-O175G	HPSI-175G	2.9×1.18×1.68	3.2×1.1×1.6	1320	1750	180	180
HPSI-O208G	HPSI-208G	3.2×1.25×1.85	3.4×1.4×1.8	2150	2780	280	280
HPSI-O223G	HPSI-223G	3.35×1.3×1.9	3.7×1.4×1.8	2450	3120	300	300
HPSI-O258G	HPSI-258G	3.56×1.42×2.05	3.7×1.4×1.8	4885	5850	350	350
HPSI-O280G	HPSI-280G	4.08×1.715×2	3.7×1.4×1.8	5650	6720	380	380
HPSI-O399G	HPSI-399G	4.25×1.75×2.1	4×1.45×2	6850	8150	450	450
HPSI-O419G	HPSI-419G	4.35×1.8×2.15	4.0×1.6×2.25	7200	8550	480	480
HPSI-O500G	HPSI-500G	4.45×1.85×2.2	4.2×1.6×2.25	7600	8950	500	500
HPSI-O704G	HPSI-704G	4.7×2.05×2.35	4.8×1.8×2.3	8800	10600	600	600
HPSI-O769G	HPSI-769G	4.75×2.08×2.38	4.8×1.8×2.3	9200	11050	620	620
HPSI-O800G	HPSI-800G	4.8×2.1×2.4	4.8×1.8×2.3	9500	11400	650	650
HPSI-O1028G	HPSI-1028G	5.2×2.2×2.6	20尺柜/40尺柜	11800	14200	800	800
HPSI-O1140G	HPSI-1140G	5.25×2.25×2.63	20尺柜/40尺柜	12300	14750	820	820
HPSI-O1448G	HPSI-1448G	5.3×2.28×2.65	20尺柜/40尺柜	12800	15300	850	850
HPSI-O1525G	HPSI-1525G	5.5×2.3×2.7	20尺柜/40尺柜	13500	16200	900	900
HPSI-O1650G	HPSI-1650G	5.65×2.35×2.75	20尺柜/40尺柜	14300	17100	950	950
HPSI-O1875G	HPSI-1875G	5.8×2.4×2.8	40尺柜	15200	18200	1000	1000
HPSI-O2000G	HPSI-2000G	5.9×2.45×2.83	40尺柜	15800	18900	1050	1050
HPSI-O2125G	HPSI-2125G	6×2.5×2.88	40尺柜	16500	19800	1100	1100
HPSI-O2500G	HPSI-2500G	6.3×2.6×3	40尺柜	18800	22600	1200	1200
HPSI-O2750G	HPSI-2750G	6.45×2.65×3.05	40尺柜	19600	23500	1250	1250
HPSI-O3000G	HPSI-3000G	6.8×2.8×3.2	40尺柜	22800	27400	1400	1400
HPSI-O3375G	HPSI-3375G	6.9×2.85×3.23	定制柜	23600	28300	1450	1450
HPSI-O3438G	HPSI-3438G	7×2.88×3.28	定制柜	24500	29400	1500	1500
HPSI-O3750G	HPSI-3750G	7.2×2.95×3.35	定制柜	26800	32200	1600	1600
HPSI-O4125G	HPSI-4125G	7.35×3×3.4	定制柜	28500	34200	1650	1650

Remark: An optional external fuel tank can be customized as per customer's requirements