www.ledespecial.com

Energia solar led S. L
calle Rio Tormes 13 Fuenlabrada 28947 Madrid Spain
Email: energiasolarled2008@gmail.com
0034 916426626

Model: **ESL-2ALGD2201CA-12W**

Magnetic Linear Track Light

DALI for precise 0.1% dimming, with dual compatibility for 0-10V, TRIAC, ZigBee

Design Concept

As today's mainstream lamp, magnetic rail lamp is highly respected by designers for its flexibility, convenience and stylish appearance. It delivers a sleek, sophisticated visual aesthetic throughout the space, filling homes with modern flair. The floodlight module serves as a fundamental lighting unit, boasting a minimalist, streamlined silhouette. When paired with the grille module, it delivers accent lighting to focal zones. Whether you require accent lighting to emphasize architectural details, general lighting for base illumination, or ambient lighting to elevate spatial ambiance, all lighting demands can be fulfilled by this magnetic track lighting system.

Range of application

This system is extensively deployed in commercial spaces requiring decorative lighting and targeted accent lights, including apparel boutiques, jewelry shops, exhibition halls, hotels and clubs. Boasting a trendy look, strong tech-inspired aesthetic and outstanding flexibility, it has gained immense popularity among younger generations. Designers frequently adopt it for residential lighting schemes in living rooms, bedrooms, studies and more. Empower unique design, enrich every moment of life!



Basic parameter

Warranty	5 years
Wattage	12W
Size	L306×W22×H44mm
Cutout	/
Installation	Magnetic Track
IPgrade	IP20
Beam Angle	110°
Main Material	Aluminum+PC
Finished Color	Sandy White/Sandy Black
Working Temperature	-10°C~40°C
Product Standards	IEC(or EN)60598-1
Certification	CB / CE / ERP

Dimensions (mm)

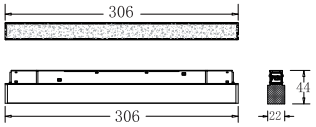

LED parameter

LED Brand&Type	OSRAM 3528 3V 0.5W
CRI	≥90
CCT	3000K | 4000K | 5000K
Light Efficiency	85lm/w
LED chip numbers	48 pcs
Lumen	3000K:864 lm | 4000K:885 lm | 5000K:905 lm

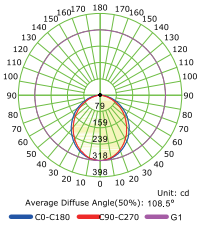

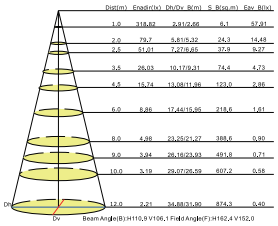

Packaging parameter

Quatity	48 pcs/ctn
N.W.	10.9 kg/ctn
G.W.	11.6 kg/ctn
Inner Box	L50×W28×H322mm
Outer Box	L335×W320×H250mm
Volume	0.0268m³/ctn
Weight	229g/pcs
Weight	199g/pcs

Tips: Color temperature, lumen, beam angle and power all have errors of ±10%, which belongs to the normal range.

www.ledespecial.com

Energia solar led S. L
calle Rio Tormes 13 Fuenlabrada 28947 Madrid Spain
Email: energiasolarled2008@gmail.com
0034 916426626

Model: **ESL-2ALGD2201CA-24W**

Magnetic Linear Track Light

DALI for precise 0.1% dimming, with dual compatibility for 0-10V, TRIAC, ZigBee

Design Concept

As today's mainstream lamp, magnetic rail lamp is highly respected by designers for its flexibility, convenience and stylish appearance. It delivers a sleek, sophisticated visual aesthetic throughout the space, filling homes with modern flair. The floodlight module serves as a fundamental lighting unit, boasting a minimalist, streamlined silhouette. When paired with the grille module, it delivers accent lighting to focal zones. Whether you require accent lighting to emphasize architectural details, general lighting for base illumination, or ambient lighting to elevate spatial ambiance, all lighting demands can be fulfilled by this magnetic track lighting system.

Range of application

This system is extensively deployed in commercial spaces requiring decorative lighting and targeted accent lights, including apparel boutiques, jewelry shops, exhibition halls, hotels and clubs. Boasting a trendy look, strong tech-inspired aesthetic and outstanding flexibility, it has gained immense popularity among younger generations. Designers frequently adopt it for residential lighting schemes in living rooms, bedrooms, studies and more. Empower unique design, enrich every moment of life!



Basic parameter

Warranty	5 years
Wattage	24W
Size	L601×W22×H44mm
Cutout	/
Installation	Magnetic Track
IPgrade	IP20
Beam Angle	110°
Main Material	Aluminum+PC
Finished Color	Sandy White/Sandy Black
Working Temperature	-10°C~40°C
Product Standards	IEC(or EN)60598-1
Certification	CB / CE / ERP

Dimensions (mm)

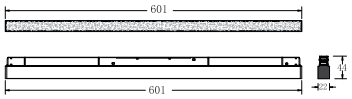

LED parameter

LED Brand&Type	OSRAM 3528 3V 0.5W
CRI	≥90
CCT	3000K | 4000K | 5000K
Light Efficiency	96lm/w
LED chip numbers	48 pcs
Lumen	3000K:1768 lm | 4000K:1821 lm | 5000K:1856 lm

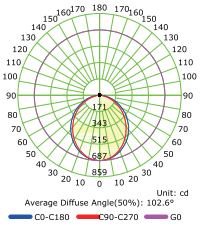

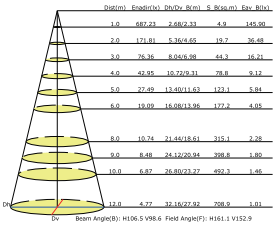

Packaging parameter

Quatity	30 pcs/ctn
N.W.	12.1 kg/ctn
G.W.	13.4 kg/ctn
Inner Box	L50×W28×H619mm
Outer Box	L630×W270×H190mm
Volume	0.0323m³/ctn
Weight	435g/pcs
Weight	379g/pcs

Tips: Color temperature, lumen, beam angle and power all have errors of ±10%, which belongs to the normal range.

www.ledespecial.com

Energia solar led S. L
calle Rio Tormes 13 Fuenlabrada 28947 Madrid Spain
Email: energiasolarled2008@gmail.com
0034 916426626

Model: **ESL-2ALGD2201CA-36W**

Magnetic Linear Track Light

DALI for precise 0.1% dimming, with dual compatibility for 0-10V, TRIAC, ZigBee

Design Concept

As today's mainstream lamp, magnetic rail lamp is highly respected by designers for its flexibility, convenience and stylish appearance. It delivers a sleek, sophisticated visual aesthetic throughout the space, filling homes with modern flair. The floodlight module serves as a fundamental lighting unit, boasting a minimalist, streamlined silhouette. When paired with the grille module, it delivers accent lighting to focal zones. Whether you require accent lighting to emphasize architectural details, general lighting for base illumination, or ambient lighting to elevate spatial ambiance, all lighting demands can be fulfilled by this magnetic track lighting system.

Range of application

This system is extensively deployed in commercial spaces requiring decorative lighting and targeted accent lights, including apparel boutiques, jewelry shops, exhibition halls, hotels and clubs. Boasting a trendy look, strong tech-inspired aesthetic and outstanding flexibility, it has gained immense popularity among younger generations. Designers frequently adopt it for residential lighting schemes in living rooms, bedrooms, studies and more. Empower unique design, enrich every moment of life!



Basic parameter

Warranty	5 years
Wattage	36W
Size	L896×W22×H44mm
Cutout	/
Installation	Magnetic Track
IPgrade	IP20
Beam Angle	110°
Main Material	Aluminum+PC
Finished Color	Sandy White/Sandy Black
Working Temperature	-10°C~40°C
Product Standards	IEC(or EN)60598-1
Certification	CB / CE / ERP

Dimensions (mm)

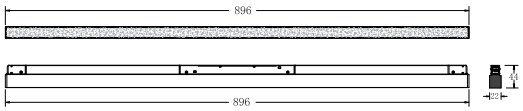

LED parameter

LED Brand&Type	OSRAM 3528 3V 0.5W
CRI	≥90
CCT	3000K | 4000K | 5000K
Light Efficiency	85lm/w
LED chip numbers	144 pcs
Lumen	3000K:2759 lm | 4000K:2828 lm | 5000K:2893 lm

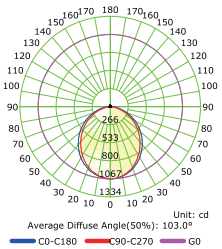

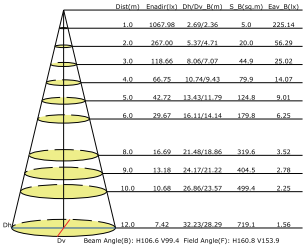

Packaging parameter

Quatity	25 pcs/ctn
N.W.	14.2 kg/ctn
G.W.	15.6 kg/ctn
Inner Box	L50×W28×H913mm
Outer Box	L925×W265×H165mm
Volume	0.04045m³/ctn
Weight	637g/pcs
Weight	526g/pcs

Tips: Color temperature, lumen, beam angle and power all have errors of ±10%, which belongs to the normal range.

www.ledespecial.com

Energia solar led S. L
calle Rio Tormes 13 Fuenlabrada 28947 Madrid Spain
Email: energiasolarled2008@gmail.com
0034 916426626

Model: **ESL-2ALGD2201CA-36W**

Magnetic Linear Track Light

DALI for precise 0.1% dimming, with dual compatibility for 0-10V, TRIAC, ZigBee

Design Concept

01 Drive parameter

Driver	No Dimming, flicker-free
Input	DC 48V
Output	/
Typical Efficiency	/
Certificate	/

02 Drive parameter

Driver	0-10V Dimming, flicker-free
Input	DC 48V
Output	/
Typical Efficiency	/
Certificate	/

03 Drive parameter

Driver	Triac Dimming, flicker-free
Input	DC 48V
Output	/
Typical Efficiency	/
Certificate	/

04 Drive parameter

Driver	DALI Dimming , flicker-free
Input	DC 48V
Output	/
Typical Efficiency	/
Certificate	/

05 Drive parameter

Driver	Zigbee Dimming , flicker-free
Input	DC 48V
Output	/
Typical Efficiency	/
Certificate	/

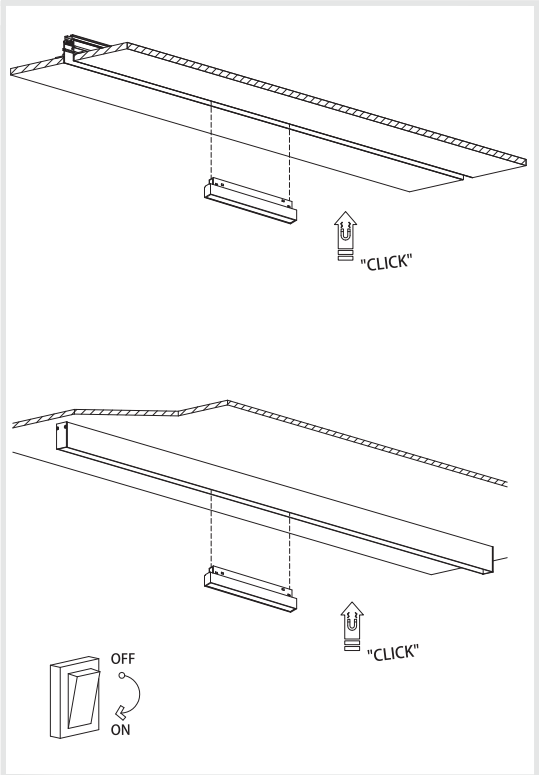

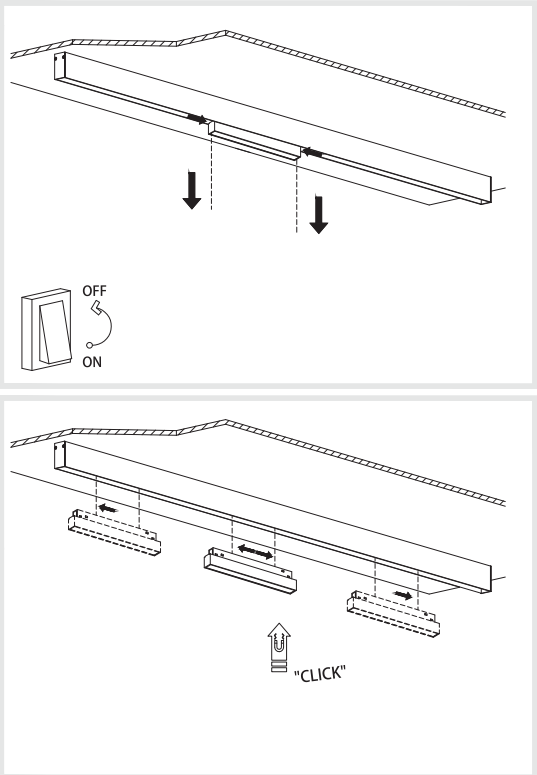

Tips: Color temperature, lumen, beam angle and power all have errors of ±10%, which belongs to the normal range.