惠 州 市 泰 富 電 器 有 限 公 司

HUIZHOU TAIFU ELECTRIC APPLIANCE CO.,LTD.

承　　認　　書

SPECIFICATION FOR APPROVAL

客户 ：	
日期 ：	2022 年 1 月 16 日
品名 ：	保险丝座
图号 ：	H3-18

地址：广东省惠州市潼侨镇通桥工业基地
电话：0752-5306102
网址：www.hinew-cn.com

惠州市泰富電器有限公司

HUIZHOU TAIFU ELECTRIC APPLIANCE CO.,LTD.

型號 Model No.	**H 3 — 18**
規格 Rating	40A 600V AC
結緣電阻 Insulation resistance	DC 500V 100MΩ Min
耐電壓 Voltage breakdown	AC 1500V 1 minute
保險絲規格 Fuse size	Φ 10 X 38 mm

惠州市泰富電器有限公司

HUIZHOU TAIFU ELECTRIC APPLIANCE CO.,LTD.

ALL INFORMATION CONTAINED OR DISCLOSED BY THIS DOCUMENT Is CONSIDERED CONFIDENTIAL AND PROPRIETARY BY HINEW ELECTRIC APPLIANCE CO.,LTD. ALL DESIGN MANUFACTURING. USE. REPRODUCTION.AND ALL SALES RIGHTS. ARE EXPRESSLY RESERVED BY AND TO HINEW ELECTRIC APPLIANCE CO.,LID. AND COMMUNICATION OF THIS INFORMATION TO OTHERS IS PROHIBITED WITHOUT THE PRIOR WRITTEN CONSENT OF SELLI

0	±0.5
0.0	±0.3
0.00	±0.005

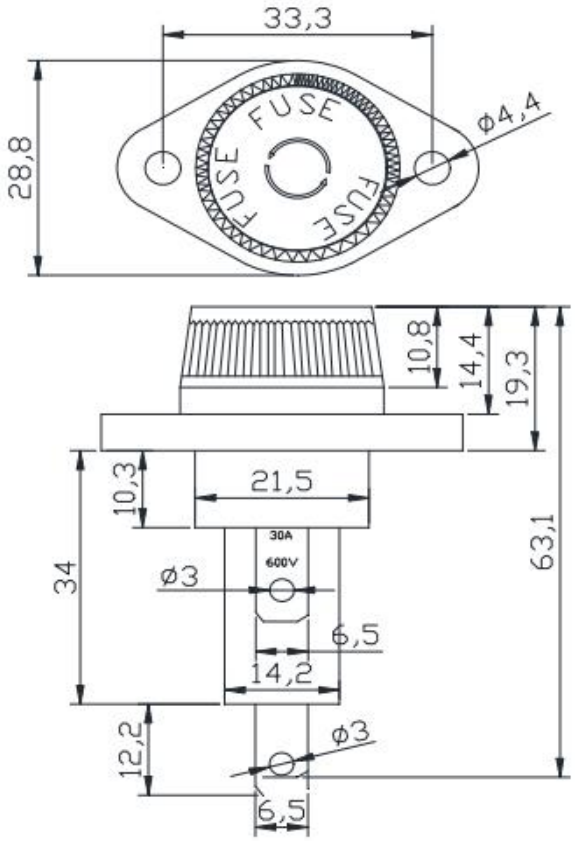

1.size: 30A 600V
2.case material: phenolic resin
3.fuse: 10*38mm
4.fire rating: UL94V0
5,Terminal: brass nickel plated

	UNIT	mm	Fuseholder	QTY.	
	SCALE	1:1		MATL.	
DESIGNED			H3-18	HDN.	
DRAWN				F.SIZE	
CHECKED			HINEW	FILE	
APPROVED				SHEET	