Fuseholder H3-82A/B/C/D

PCB mount

Insertion fuse A/D：Medium-sized fuse C/D：Miniature fuse

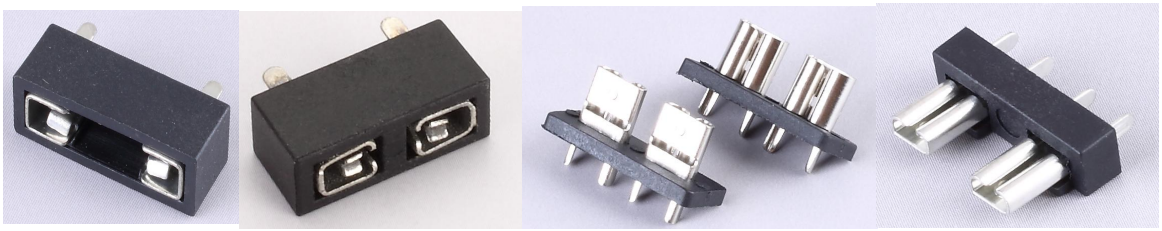

H3-82A H3-82B H3-82C H3-82D

500VAC 30A

Description

PCBsolder terminals

References

Weblinks

pdf, General Product Information, Approvals, RoHS, CHINA-RoHS,

Technical Data

Shocksafe Category	PC2	Solderability	350℃ / 2sec acc. to IEC 60068-2-20, Test Ta, method 2
Fuse-Link	A/D：Medium-sized fuse C/D：Miniature fuse	Resistance to Soldering Heat	:350℃ / 10sec acc. to IEC 60068-2-20, Test Tb, method 2
Mounting	PCB mount	Impulse Withstand Voltage	> 4kV between L-N > 6kV between L/N-PE
Mounting	Fixing Nut	Insulation Resistance	> 10MΩ between L-N > 100MΩ between L/N-PE (500VDC; 1 min)
Terminal	Tin-plated brass	Overvoltage Category	I - III acc. to IEC 60664-1
Rated Voltage	500VAC/DC	Pollution Degree	1 - 3 acc. to IEC 60664-1
Rated Current	30A	Panel Thickness s	max 3mm
Admissible Ambient Air Temp.	-40℃to85℃		
Climatic Category	40/085/21 acc. to IEC 60068-1		
Material: Socket	Thermoplastic, black, UL 94V-0		
Material: Terminals	Tin-Plated Copper Alloy		
Unit Weight (Socket/Cap)			
Storage Conditions	0℃ to 60℃, max. 70% r.h.		
Soldering Methods	Suitable for wave soldering processes with peak temperatures ranging from 230 to 260 °C. SMD components are suitable for reflow soldering processes with a peak temperature of 260°C.		

Abmessungen

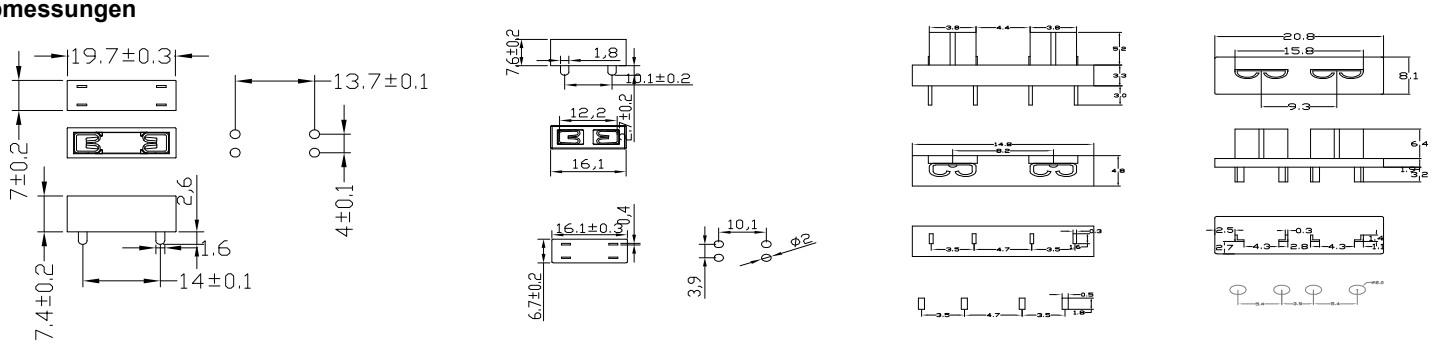

H3-82A H3-82B H3-82C H3-82D