Fuseholder **ANS-500C**



ANS-500C

58VDC Max200A

RoHS

References

Weblinks

pdf, General Product Information, Approvals, RoHS, CHINA-RoHS,

Technical Data

Fuse-Link	Plastic fuse
Mounting	Fixing Nut
Rated Voltage	58VDC
Rated Current	Max 200A
Material: Shell	Polycarbonate UL 94V0
Material: Cover	Polycarbonate UL 94V0
Screw:	8.8 grade nickel plating
Nut torque	Max 8Nm
Dielectric Strength (Terminal Block to Base)	750 VDC
Admissible Ambient Air Temp.	-40℃to85℃
Unit Weight (Socket/Cap)	77.3 g / 24.2g
Storage Conditions	0℃ to 60℃, max. 70% r.h.
Product Marking	Type, Voltage, Current, Approvals

Abmessungen

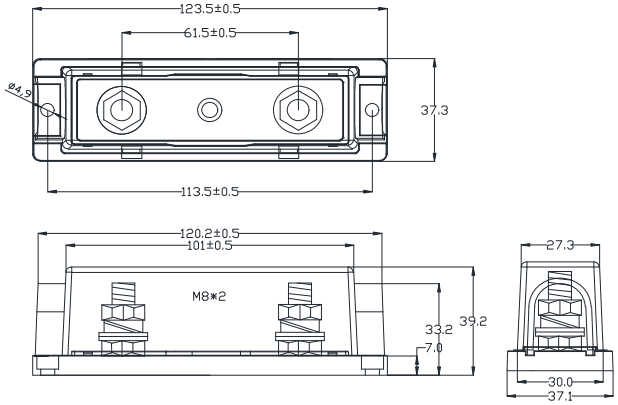

ANS-500C

Optional accessories

Description

500GI



Transparent cover （optional）