Fuseholder **ANM-B2**



58VDC Max250Ax2

RoHS

References
Weblinks
pdf, General Product Information, Approvals, RoHS, CHINA-RoHS

Technical Data

Fuse-Link	MIDI fuse
Mounting	Fixing Nut
Rated Voltage	58VDC
Rated Current	Max 250Ax2
Material: Shell	Glass fiber reinforced nylon UL 94V0
Screw:	M8 nickel-plated screws
Material: Cover	Polycarbonate UL 94V0
Nut torque	recommended torque 7-8 N-m
Dielectric Strength (Terminal Block to Base)	750 VDC
Admissible Ambient Air Temp.	-40℃to85℃
Unit Weight (Socket/Cap)	94.3 g / 24.2g
Storage Conditions	0℃ to 60℃, max. 70% r.h.
Product Marking	Type, Voltage, Current, Approvals

Abmessungen

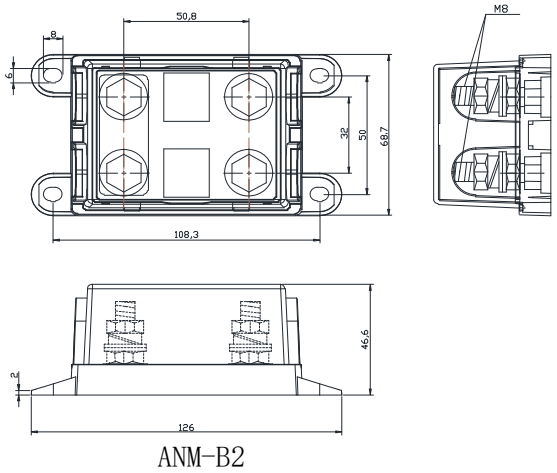

ANM-B2