Promov®

Photovoltaic Series SPD

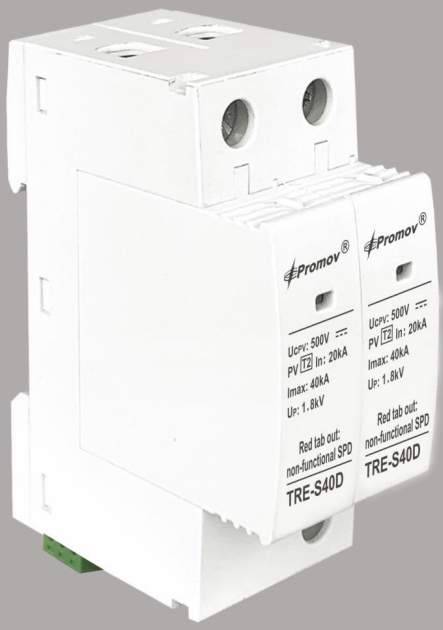

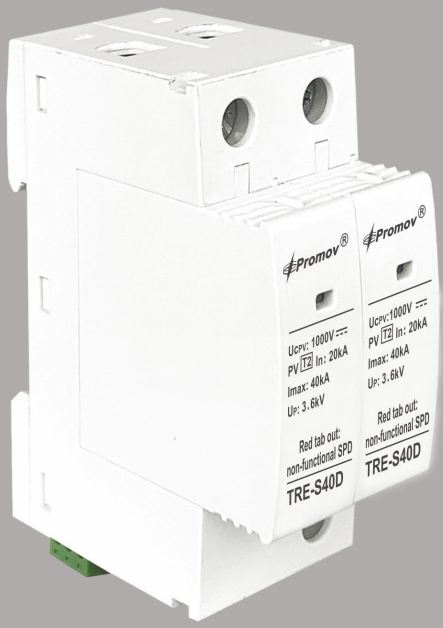





TRE-S40D-500V

PV-T2-Imax40kA-Uc500V-Up1.8kV



Reference:

1. Location of use: Photovoltaic DC side (e.g., between PV panels and inverter)
2. Earth connection: TN/TT system; PE terminal for grounding
3. Protection mode: Differential mode (positive/negative to PE)
4. IEC/EN category: Type 2 according to IEC/EN 61643-31 (specific for PV systems)
5. Compliance: IEC/EN 61643-31 CE marked CB marked

Class 2

Technical Data

SPD configuration			Promov(solar)
Maximum continuous operating voltage		Uc	500V
Voltage protection level		Up	<1.8kV
Maximum discharge current (8/20 μs)		In	20 kA
Impulse discharge current (8/20 μs)	(L-N) / (N-PE)	Imax	40 kA
Response time	(L-N) / (N-PE)	tA	< 25ns
Leakage current	(L-N) / (N-PE)	LC	< 20uA
Operating temperature range		Ta	-40°C à +80°C
Permissible operating humidity		RH	5%...95%
Degree of protection			IP20(integrated)
Remote contacts(RC)			No
RC switching capacity			/
Clamping screw			M6/M2
Clamping screw torque		Nm	2.5N.m/0.2N.m
Mounting			Rail DIN 35mm,EN 60715
Housing material			PBT/PA66 UI94 V-0
"Operational/Fault"indication			Yes
Thermal protection			Yes
Conductorcross-section(Min)			2.5mm²/multi-core flexible cable (2.5mm²/multi-core rigid cable)
Conductorcross-section(Max)			25mm²/multi-core flexible cable (35mm²/multi-core rigid cable)

Electricalschematic diagram

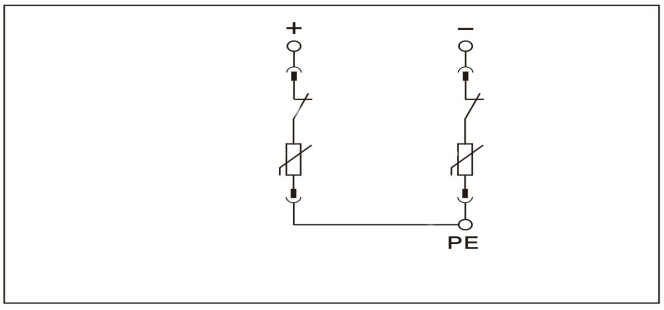

Promov® Surge Protection Devices Catalogue - All rights reserved - 2024



TRE-S40DR-500V

PV-T2-Imax40kA-Uc500V-Up1.8kV

Promov®

Reference:

1.Location of use: Photovoltaic DC side (e.g., between PV panels and inverter)

2.Earth connection: TN/TT system; PE terminal for grounding

3.Protection mode:Differential mode (positive/negative to PE)

4.IEC/EN category: Type 2 according to IEC/EN 61643-31 (specific for PV systems)

5.Compliance: IEC/EN 61643-31 CE marked CB marked

CE

CB

Class 2

Technical Data

SPD configuration			Promov(solar)
Maximum continuous operating voltage		Uc	500V
Voltage protection level		Up	<1.8 kV
Maximum discharge current (8/20 μs)		In	20 kA
Impulse discharge current (8/20 μs)	(L-N) / (N-PE)	Imax	40 kA
Response time	(L-N) / (N-PE)	tA	< 25ns
Leakage current	(L-N) / (N-PE)	LC	< 20uA
Operating temperature range		Ta	-40°C à +80°C
Permissible operating humidity		RH	5%...95%
Degree of protection			IP20(integrated)
Remote contacts(RC)			Yes
RC switching capacity			DC:48V/0.5A,AC:125V/0.2A
Clamping screw			M6/M2
Clamping screw torque		Nm	2.5N.m/0.2N.m
Mounting			Rail DIN 35mm,EN 60715
Housing material			PBT/PA66 UI94 V-0
"Operational/Fault"indication			Yes
Thermal protection			Yes
Conductorcross-section(Min)			2.5mm²/multi-core flexible cable (2.5mm²/multi-core rigid cable)
Conductorcross-section(Max)			25mm²/multi-core flexible cable (35mm²/multi-core rigid cable)

Electricalschematic diagram

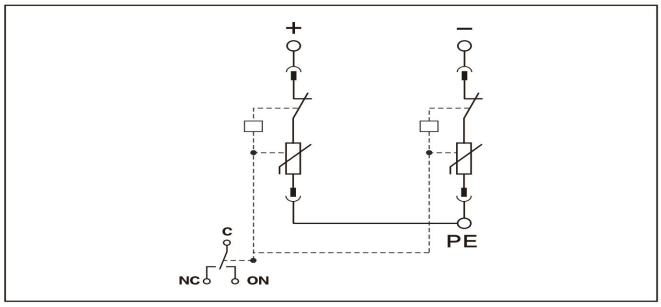

Promov® Surge Protection Devices Catalogue - All rights reserved - 2024

TRE-S40D-750V

PV-T2-Imax40kA-Uc750V-Up2.3kV



Reference:

1. Location of use: Photovoltaic DC side (e.g., between PV panels and inverter)
2. Earth connection: TN/TT system; PE terminal for grounding
3. Protection mode:Differential mode (positive/negative to PE)
4. IEC/EN category: Type 2 according to IEC/EN 61643-31 (specific for PV systems)
5. Compliance: IEC/EN 61643-31 CE marked CB marked

Class 2

Technical Data

SPD configuration			Promov(solar)
Maximum continuous operating voltage		Uc	750V
Voltage protection level		Up	<2.3kV
Maximum discharge current (8/20 μs)		In	20 kA
Impulse discharge current (8/20 μs)	(L-N) / (N-PE)	Imax	40 kA
Response time	(L-N) / (N-PE)	tA	< 25ns
Leakage current	(L-N) / (N-PE)	LC	< 20uA
Operating temperature range		Ta	-40°C à +80°C
Permissible operating humidity		RH	5%...95%
Degree of protection			IP20(integrated)
Remote contacts(RC)			No
RC switching capacity			/
Clamping screw			M6/M2
Clamping screw torque		Nm	2.5N.m/0.2N.m
Mounting			Rail DIN 35mm,EN 60715
Housing material			PBT/PA66 UI94 V-0
"Operational/Fault"indication			Yes
Thermal protection			Yes
Conductorcross-section(Min)			2.5mm²/multi-core flexible cable (2.5mm²/multi-core rigid cable)
Conductorcross-section(Max)			25mm²/multi-core flexible cable (35mm²/multi-core rigid cable)

Electricalschematic diagram

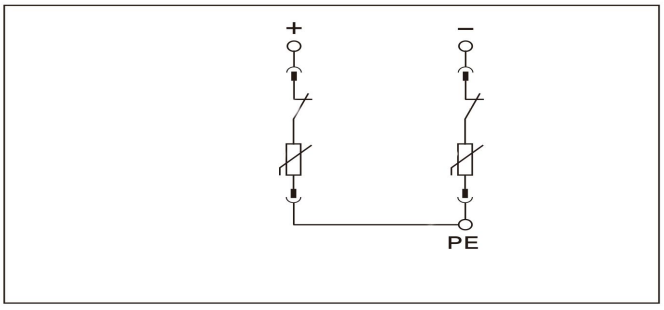

Promov® Surge Protection Devices Catalogue - All rights reserved - 2024

TRE-S40DR-750V



PV-T2-Imax40kA-Uc750V-Up2.3kV

Reference:

1. Location of use: Photovoltaic DC side (e.g., between PV panels and inverter)
2. Earth connection: TN/TT system; PE terminal for grounding
3. Protection mode:Differential mode (positive/negative to PE)
4. IEC/EN category: Type 2 according to IEC/EN 61643-31 (specific for PV systems)
5. Compliance: IEC/EN 61643-31 CE marked CB marked

Class 2

Technical Data

SPD configuration			Promov(solar)
Maximum continuous operating voltage		Uc	750V
Voltage protection level		Up	<2.3kV
Maximum discharge current (8/20 μs)		In	20 kA
Impulse discharge current (8/20 μs)	(L-N) / (N-PE)	Imax	40 kA
Response time	(L-N) / (N-PE)	tA	< 25ns
Leakage current	(L-N) / (N-PE)	LC	< 20uA
Operating temperature range		Ta	-40°C à +80°C
Permissible operating humidity		RH	5%...95%
Degree of protection			IP20(integrated)
Remote contacts(RC)			Yes
RC switching capacity			DC:48V/0.5A,AC:125V/0.2A
Clamping screw			M6/M2
Clamping screw torque		Nm	2.5N.m/0.2N.m
Mounting			Rail DIN 35mm,EN 60715
Housing material			PBT/PA66 UI94 V-0
"Operational/Fault"indication			Yes
Thermal protection			Yes
Conductorcross-section(Min)			2.5mm²/multi-core flexible cable (2.5mm²/multi-core rigid cable)
Conductorcross-section(Max)			25mm²/multi-core flexible cable (35mm²/multi-core rigid cable)

Electricalschematic diagram

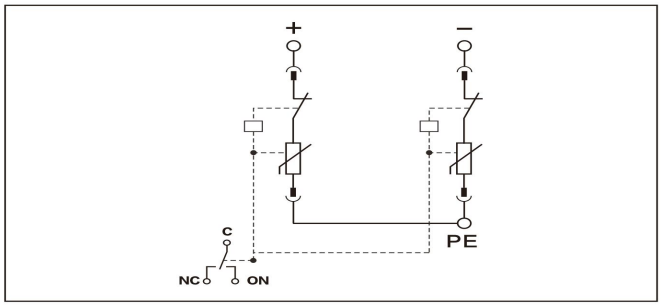

Promov® Surge Protection Devices Catalogue - All rights reserved - 2024



TRE-S40D-1000V

PV-T2-Imax40kA-Uc1000V-Up3.6kV

Promov®

Class 2

Reference:

1. Location of use: Photovoltaic DC side (e.g., between PV panels and inverter)
2. Earth connection: TN/TT system; PE terminal for grounding
3. Protection mode:Differential mode (positive/negative to PE)
4. IEC/EN category: Type 2 according to IEC/EN 61643-31 (specific for PV systems)
5. Compliance: IEC/EN 61643-31 CE marked CB marked

Technical Data

SPD configuration			Promov(solar)
Maximum continuous operating voltage		Uc	1000V
Voltage protection level		Up	<3.6kV
Maximum discharge current (8/20 μs)		In	20 kA
Impulse discharge current (8/20 μs)	(L-N) / (N-PE)	Imax	40 kA
Response time	(L-N) / (N-PE)	tA	< 25ns
Leakage current	(L-N) / (N-PE)	LC	< 20uA
Operating temperature range		Ta	-40°C à +80°C
Permissible operating humidity		RH	5%...95%
Degree of protection			IP20(integrated)
Remote contacts(RC)			No
RC switching capacity			/
Clamping screw			M6/M2
Clamping screw torque		Nm	2.5N.m/0.2N.m
Mounting			Rail DIN 35mm,EN 60715
Housing material			PBT/PA66 UI94 V-0
"Operational/Fault"indication			Yes
Thermal protection			Yes
Conductorcross-section(Min)			2.5mm²/multi-core flexible cable (2.5mm²/multi-core rigid cable)
Conductorcross-section(Max)			25mm²/multi-core flexible cable (35mm²/multi-core rigid cable)

Electricalschematic diagram

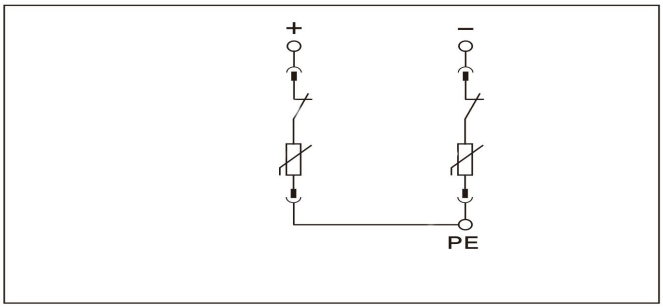

Promov® Surge Protection Devices Catalogue - All rights reserved - 2024



TRE-S40DR-1000V

PV-T2-Imax40kA-Uc1000V-Up3.6kV

Class 2

Reference:

1. Location of use: Photovoltaic DC side (e.g., between PV panels and inverter)
2. Earth connection: TN/TT system; PE terminal for grounding
3. Protection mode:Differential mode (positive/negative to PE)
4. IEC/EN category: Type 2 according to IEC/EN 61643-31 (specific for PV systems)
5. Compliance: IEC/EN 61643-31 CE marked CB marked

Technical Data

SPD configuration			Promov(solar)
Maximum continuous operating voltage		Uc	1000V
Voltage protection level		Up	<3.6kV
Maximum discharge current (8/20 μs)		In	20 kA
Impulse discharge current (8/20 μs)	(L-N) / (N-PE)	Imax	40 kA
Response time	(L-N) / (N-PE)	tA	< 25ns
Leakage current	(L-N) / (N-PE)	LC	< 20uA
Operating temperature range		Ta	-40°C à +80°C
Permissible operating humidity		RH	5%...95%
Degree of protection			IP20(integrated)
Remote contacts(RC)			Yes
RC switching capacity			DC:48V/0.5A,AC:125V/0.2A
Clamping screw			M6/M2
Clamping screw torque		Nm	2.5N.m/0.2N.m
Mounting			Rail DIN 35mm,EN 60715
Housing material			PBT/PA66 UI94 V-0
"Operational/Fault"indication			Yes
Thermal protection			Yes
Conductorcross-section(Min)			2.5mm²/multi-core flexible cable (2.5mm²/multi-core rigid cable)
Conductorcross-section(Max)			25mm²/multi-core flexible cable (35mm²/multi-core rigid cable)

Electricalschematic diagram

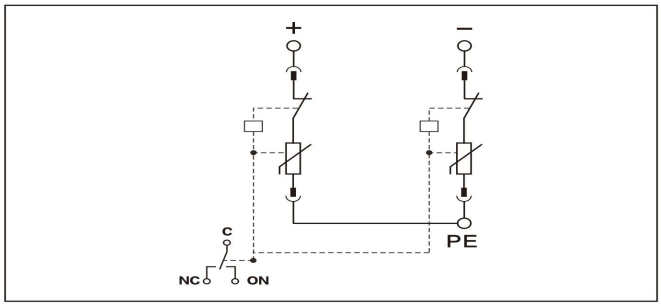

Promov® Surge Protection Devices Catalogue - All rights reserved - 2024

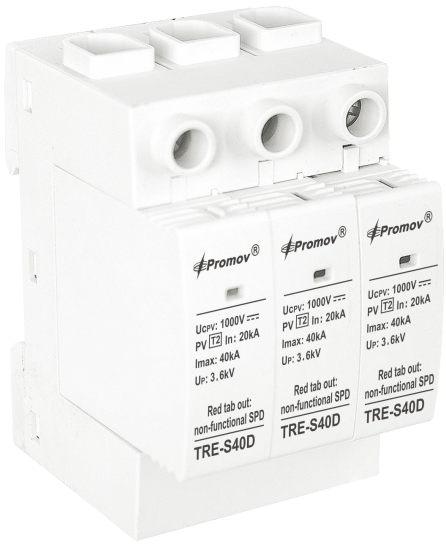

TRE-S40D-1000V

PV-T2-Imax40kA-Uc1000V-Up3.6kV

Reference:

1. Location of use: Photovoltaic DC side (e.g., between PV panels and inverter)
2.Earth connection: TN/TT system; PE terminal for grounding
3.Protection mode:Common mode & differential mode (positive/negative to PE and between+/－)
4.IEC/EN category: Type 2 according to IEC/EN 61643-31 (specific for PV systems)
5.Compliance: IEC/EN 61643-31 CE marked CB marked

Class 2

Technical Data

SPD configuration			Promov(solar)
Maximum continuous operating voltage		Uc	1000V
Voltage protection level		Up	<3.6kV
Maximum discharge current (8/20 μs)		In	20 kA
Impulse discharge current (8/20 μs)	(L-N) / (N-PE)	Imax	40 kA
Response time	(L-N) / (N-PE)	tA	< 25ns
Leakage current	(L-N) / (N-PE)	LC	< 20uA
Operating temperature range		Ta	-40°C à +80°C
Permissible operating humidity		RH	5%...95%
Degree of protection			IP20(integrated)
Remote contacts(RC)			Yes
RC switching capacity			DC:48V/0.5A,AC:125V/0.2A
Clamping screw			M6/M2
Clamping screw torque		Nm	2.5N.m/0.2N.m
Mounting			Rail DIN 35mm,EN 60715
Housing material			PBT/PA66 UI94 V-0
"Operational/Fault"indication			Yes
Thermal protection			Yes
Conductorcross-section(Min)			2.5mm²/multi-core flexible cable (2.5mm²/multi-core rigid cable)
Conductorcross-section(Max)			25mm²/multi-core flexible cable (35mm²/multi-core rigid cable)

Electricalschematic diagram

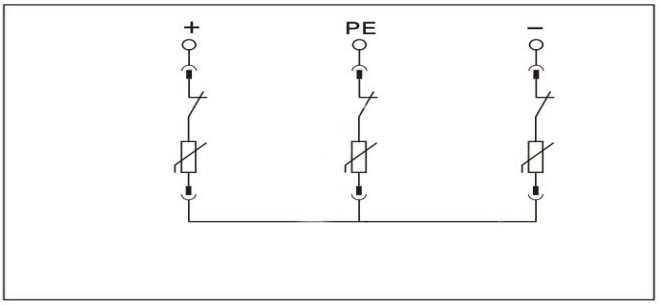

Promov® Surge Protection Devices Catalogue - All rights reserved - 2024

TRE-S40DR-1000V

PV-T2-Imax40kA-Uc1000V-Up3.6kV

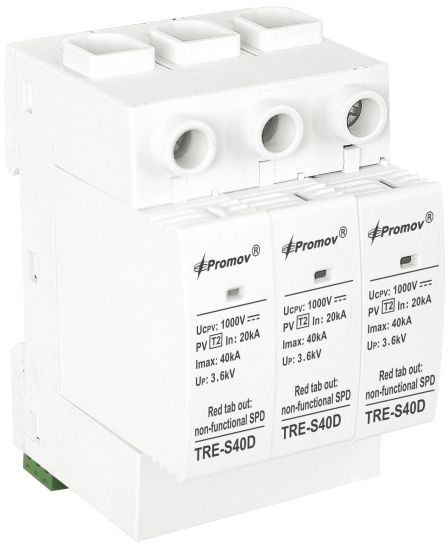

Reference:

1. Location of use: Photovoltaic DC side (e.g., between PV panels and inverter)
2. Earth connection: TN/TT system; PE terminal for grounding
3. Protection mode:Common mode & differential mode (positive/negative to PE and between+/－)
4. IEC/EN category: Type 2 according to IEC/EN 61643-31 (specific for PV systems)
5. Compliance: IEC/EN 61643-31 CE marked CB marked

Class 2

Technical Data

SPD configuration			Promov(solar)
Maximum continuous operating voltage		Uc	1000V
Voltage protection level		Up	< 3.6 kV
Maximum discharge current (8/20 μs)		In	20 kA
Impulse discharge current (8/20 μs)	(L-N) / (N-PE)	Imax	40 kA
Response time	(L-N) / (N-PE)	tA	< 25ns
Leakage current	(L-N) / (N-PE)	LC	< 20uA
Operating temperature range		Ta	-40°C à +80°C
Permissible operating humidity		RH	5%...95%
Degree of protection			IP20(integrated)
Remote contacts(RC)			Yes
RC switching capacity			DC:48V/0.5A,AC:125V/0.2A
Clamping screw			M6/M2
Clamping screw torque		Nm	2.5N.m/0.2N.m
Mounting			Rail DIN 35mm,EN 60715
Housing material			PBT/PA66 UI94 V-0
"Operational/Fault"indication			Yes
Thermal protection			Yes
Conductorcross-section(Min)			2.5mm²/multi-core flexible cable (2.5mm²/multi-core rigid cable)
Conductorcross-section(Max)			25mm²/multi-core flexible cable (35mm²/multi-core rigid cable)

Electricalschematic diagram

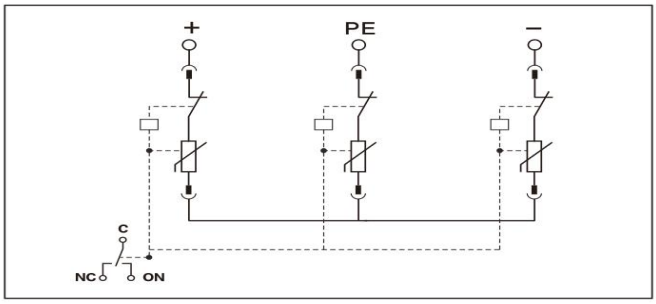

Promov® Surge Protection Devices Catalogue - All rights reserved - 2024

TRE-S40D-1200V

PV-T2-Imax40kA-Uc1200V-Up4kV

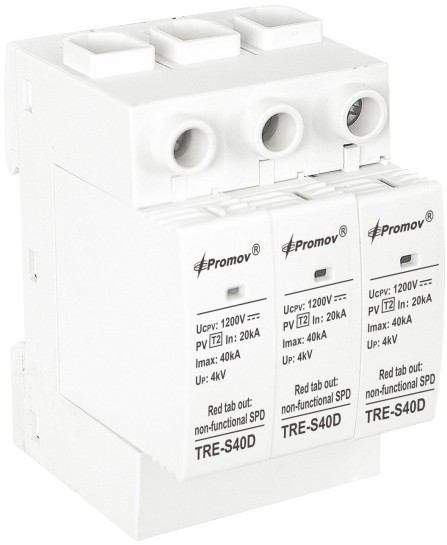

Reference:

1. Location of use: Photovoltaic DC side (e.g., between PV panels and inverter)
2.Earth connection: TN/TT system; PE terminal for grounding
3.Protection mode:Common mode & differential mode (positive/negative to PE and between+/－)
4.IEC/EN category: Type 2 according to IEC/EN 61643-31 (specific for PV systems)
5.Compliance: IEC/EN 61643-31 CE marked CB marked

Class 2

Technical Data

SPD configuration			Promov(solar)
Maximum continuous operating voltage		Uc	1200V
Voltage protection level		Up	< 4 kV
Maximum discharge current (8/20 μs)		In	20 kA
Impulse discharge current (8/20 μs)	(L-N) / (N-PE)	Imax	40 kA
Response time	(L-N) / (N-PE)	tA	< 25ns
Leakage current	(L-N) / (N-PE)	LC	< 20uA
Operating temperature range		Ta	-40°C à +80°C
Permissible operating humidity		RH	5%...95%
Degree of protection			IP20(integrated)
Remote contacts(RC)			No
RC switching capacity			/
Clamping screw			M6/M2
Clamping screw torque		Nm	2.5N.m/0.2N.m
Mounting			Rail DIN 35mm,EN 60715
Housing material			PBT/PA66 UI94 V-0
"Operational/Fault"indication			Yes
Thermal protection			Yes
Conductorcross-section(Min)			2.5mm²/multi-core flexible cable (2.5mm²/multi-core rigid cable)
Conductorcross-section(Max)			25mm²/multi-core flexible cable (35mm²/multi-core rigid cable)

Electricalschematic diagram

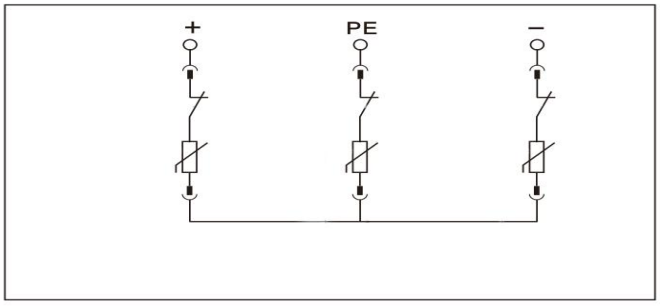

Promov® Surge Protection Devices Catalogue - All rights reserved - 2024

TRE-S40DR-1200V

PV-T2-Imax40kA-Uc1200V-Up4kV



Reference:

1. Location of use: Photovoltaic DC side (e.g., between PV panels and inverter)
2. Earth connection: TN/TT system; PE terminal for grounding
3. Protection mode:Common mode & differential mode (positive/negative to PE and between+/－)
4. IEC/EN category: Type 2 according to IEC/EN 61643-31 (specific for PV systems)
5. Compliance: IEC/EN 61643-31 CE marked CB marked

Class 2

Technical Data

SPD configuration			Promov(solar)
Maximum continuous operating voltage		Uc	1200V
Voltage protection level		Up	<4kV
Maximum discharge current (8/20 μs)		In	20 kA
Impulse discharge current (8/20 μs)	(L-N) / (N-PE)	Imax	40 kA
Response time	(L-N) / (N-PE)	tA	< 25ns
Leakage current	(L-N) / (N-PE)	LC	< 20uA
Operating temperature range		Ta	-40°C à +80°C
Permissible operating humidity		RH	5%...95%
Degree of protection			IP20(integrated)
Remote contacts(RC)			Yes
RC switching capacity			DC:48V/0.5A,AC:125V/0.2A
Clamping screw			M6/M2
Clamping screw torque		Nm	2.5N.m/0.2N.m
Mounting			Rail DIN 35mm,EN 60715
Housing material			PBT/PA66 UI94 V-0
"Operational/Fault"indication			Yes
Thermal protection			Yes
Conductorcross-section(Min)			2.5mm²/multi-core flexible cable (2.5mm²/multi-core rigid cable)
Conductorcross-section(Max)			25mm²/multi-core flexible cable (35mm²/multi-core rigid cable)

Electricalschematic diagram

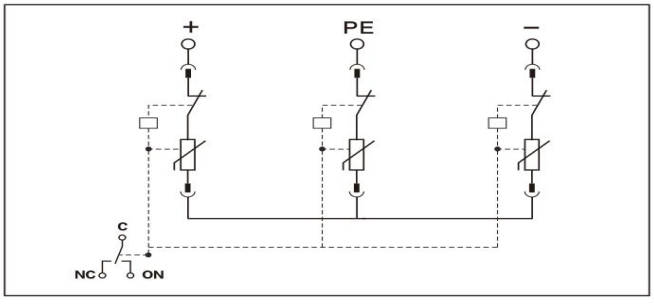

Promov® Surge Protection Devices Catalogue - All rights reserved - 2024

TRE-S40D-1300V

PV-T2-Imax40kA-Uc1300V-Up4kV

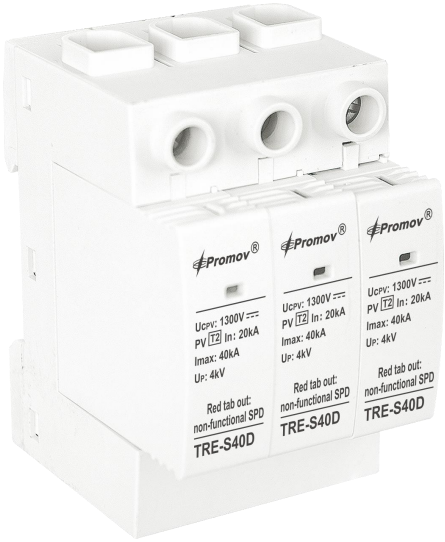

Reference:

1. Location of use: Photovoltaic DC side (e.g., between PV panels and inverter)
2.Earth connection: TN/TT system; PE terminal for grounding
3.Protection mode:Common mode & differential mode (positive/negative to PE and between+/－)
4.IEC/EN category: Type 2 according to IEC/EN 61643-31 (specific for PV systems)
5.Compliance: IEC/EN 61643-31 CE marked CB marked

Class 2

Technical Data

SPD configuration			Promov(solar)
Maximum continuous operating voltage		Uc	1300V
Voltage protection level		Up	< 4 kV
Maximum discharge current (8/20 μs)		In	20 kA
Impulse discharge current (8/20 μs)	(L-N) / (N-PE)	Imax	40 kA
Response time	(L-N) / (N-PE)	tA	< 25ns
Leakage current	(L-N) / (N-PE)	LC	< 20uA
Operating temperature range		Ta	-40°C à +80°C
Permissible operating humidity		RH	5%...95%
Degree of protection			IP20(integrated)
Remote contacts(RC)			No
RC switching capacity			/
Clamping screw			M6/M2
Clamping screw torque		Nm	2.5N.m/0.2N.m
Mounting			Rail DIN 35mm,EN 60715
Housing material			PBT/PA66 UI94 V-0
"Operational/Fault"indication			Yes
Thermal protection			Yes
Conductorcross-section(Min)			2.5mm²/multi-core flexible cable (2.5mm²/multi-core rigid cable)
Conductorcross-section(Max)			25mm²/multi-core flexible cable (35mm²/multi-core rigid cable)

Electricalschematic diagram

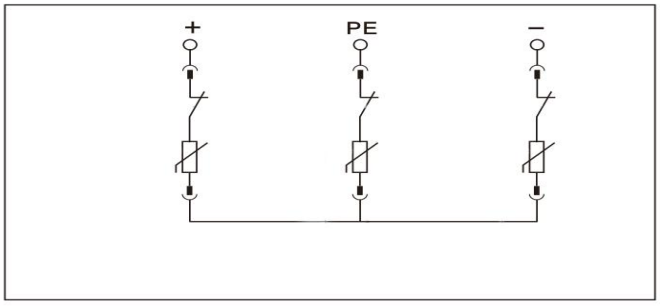

Promov® Surge Protection Devices Catalogue - All rights reserved - 2024



TRE-S40DR-1300V

PV-T2-Imax40kA-Uc1300V-Up4kV

Promov®

Class 2

Reference:

1. Location of use: Photovoltaic DC side (e.g., between PV panels and inverter)
2.Earth connection: TN/TT system; PE terminal for grounding
3.Protection mode:Common mode & differential mode (positive/negative to PE and between+/－)
4.IEC/EN category: Type 2 according to IEC/EN 61643-31 (specific for PV systems)
5.Compliance: IEC/EN 61643-31 CE marked CB marked

Technical Data

SPD configuration			Promov(solar)
Maximum continuous operating voltage		Uc	1300V
Voltage protection level		Up	< 4 kV
Maximum discharge current (8/20 μs)		In	20 kA
Impulse discharge current (8/20 μs)	(L-N) / (N-PE)	Imax	40 kA
Response time	(L-N) / (N-PE)	tA	< 25ns
Leakage current	(L-N) / (N-PE)	LC	< 20uA
Operating temperature range		Ta	-40°C à +80°C
Permissible operating humidity		RH	5%...95%
Degree of protection			IP20(integrated)
Remote contacts(RC)			Yes
RC switching capacity			DC:48V/0.5A,AC:125V/0.2A
Clamping screw			M6/M2
Clamping screw torque		Nm	2.5N.m/0.2N.m
Mounting			Rail DIN 35mm,EN 60715
Housing material			PBT/PA66 UI94 V-0
"Operational/Fault"indication			Yes
Thermal protection			Yes
Conductorcross-section(Min)			2.5mm²/multi-core flexible cable (2.5mm²/multi-core rigid cable)
Conductorcross-section(Max)			25mm²/multi-core flexible cable (35mm²/multi-core rigid cable)

Electricalschematic diagram

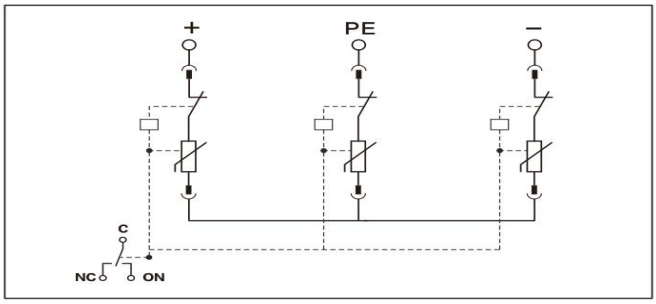

Promov® Surge Protection Devices Catalogue - All rights reserved - 2024

TRE-S40D-1500V

PV-T2-Imax40kA-Uc1500V-Up4.7kV

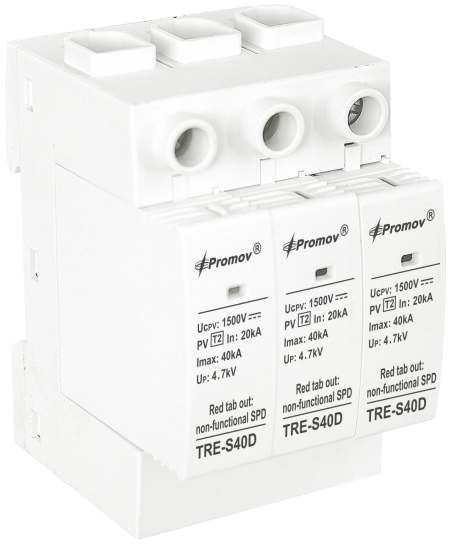

Reference:

1. Location of use: Photovoltaic DC side (e.g., between PV panels and inverter)
2.Earth connection: TN/TT system; PE terminal for grounding
3.Protection mode:Common mode & differential mode (positive/negative to PE and between+/－)
4.IEC/EN category: Type 2 according to IEC/EN 61643-31 (specific for PV systems)
5.Compliance: IEC/EN 61643-31 CE marked CB marked

Class 2

Technical Data

SPD configuration			Promov(solar)
Maximum continuous operating voltage		Uc	1500V
Voltage protection level		Up	< 4.7 kV
Maximum discharge current (8/20 μs)		In	20 kA
Impulse discharge current (8/20 μs)	(L-N) / (N-PE)	Imax	40 kA
Response time	(L-N) / (N-PE)	tA	< 25ns
Leakage current	(L-N) / (N-PE)	LC	< 20uA
Operating temperature range		Ta	-40°C à +80°C
Permissible operating humidity		RH	5%...95%
Degree of protection			IP20(integrated)
Remote contacts(RC)			No
RC switching capacity			/
Clamping screw			M6/M2
Clamping screw torque		Nm	2.5N.m/0.2N.m
Mounting			Rail DIN 35mm,EN 60715
Housing material			PBT/PA66 UI94 V-0
"Operational/Fault"indication			Yes
Thermal protection			Yes
Conductorcross-section(Min)			2.5mm²/multi-core flexible cable (2.5mm²/multi-core rigid cable)
Conductorcross-section(Max)			25mm²/multi-core flexible cable (35mm²/multi-core rigid cable)

Electricalschematic diagram

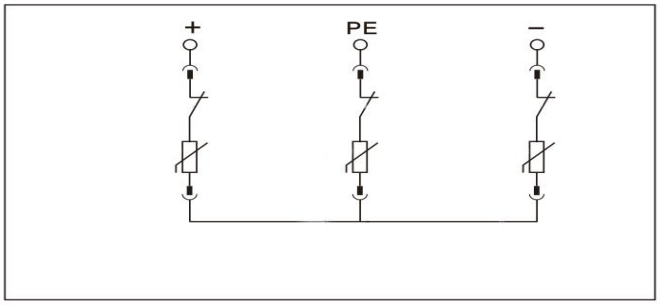

Promov® Surge Protection Devices Catalogue - All rights reserved - 2024

TRE-S40DR-1500V

PV-T2-Imax40kA-Uc1500V-Up4.7kV



Reference:

1. Location of use: Photovoltaic DC side (e.g., between PV panels and inverter)
2. Earth connection: TN/TT system; PE terminal for grounding
3. Protection mode: Common mode & differential mode (positive/negative to PE and between +/−)
4. IEC/EN category: Type 2 according to IEC/EN 61643-31 (specific for PV systems)
5. Compliance: IEC/EN 61643-31 CE marked CB marked

Class 2

Technical Data

SPD configuration			Promov(solar)
Maximum continuous operating voltage		Uc	1500V
Voltage protection level		Up	< 4.7 kV
Maximum discharge current (8/20 μs)		In	20 kA
Impulse discharge current (8/20 μs)	(L-N) / (N-PE)	Imax	40 kA
Response time	(L-N) / (N-PE)	tA	< 25ns
Leakage current	(L-N) / (N-PE)	LC	< 20uA
Operating temperature range		Ta	-40°C à +80°C
Permissible operating humidity		RH	5%...95%
Degree of protection			IP20(integrated)
Remote contacts(RC)			Yes
RC switching capacity			DC:48V/0.5A,AC:125V/0.2A
Clamping screw			M6/M2
Clamping screw torque		Nm	2.5N.m/0.2N.m
Mounting			Rail DIN 35mm,EN 60715
Housing material			PBT/PA66 UI94 V-0
"Operational/Fault"indication			Yes
Thermal protection			Yes
Conductorcross-section(Min)			2.5mm²/multi-core flexible cable (2.5mm²/multi-core rigid cable)
Conductorcross-section(Max)			25mm²/multi-core flexible cable (35mm²/multi-core rigid cable)

Electricalschematic diagram

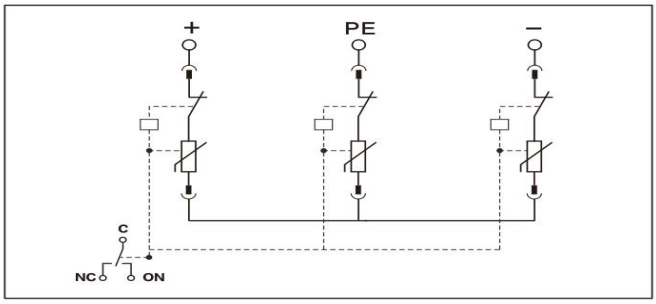

Promov® Surge Protection Devices Catalogue - All rights reserved - 2024