DOORPLUS HARDWARE CO.,LTD

DOORPLUS HARDWARE CO.,LTD
617 No.19 Dongning road Jianghai
Dist Jiangmen Guangdong China 529000
E-mail: anna@doorplus.net
Web: www.doorplus.cc



DOOR PLUS®

Architectural Hardware

PRODUCT CATALOGUE

2025

- DOORPLUS HARDWARE CO.,LTD -



ABOUT US

DOORPLUS Hardware Co.,Ltd is a manufacturer and supplier of architectural hardware to the construction industry,is located at Jiangmen city,Guangdong province in China Near HK and Macao.Doorplus products are both durable and versatile.

The Doorplus quality range of Architectural Hardware includes door hinge,door lever handles,pull handles,door stoppers,series of door-used hardware and small size metal components,etc.

Our focus on customers service,high quality and competitive price,which leading our goods are popular in Europe,Southeast Asia,Middle-East and other countries abroad.Doorplus extensive range of Architectural Hardware products offers a well-priced package of functionality and style.

ABOUT
FINISH

Color power is introduced in design, a day is enlightened through this colorful combination which reflects passion for life.

Each piece is a re-creation of art, leading the same kind of brand with innovative design. The best combination of form and meaning, the creation superposition of use function and aesthetic appeal.

Classic works of art touch the soul. Luxuriant and chic design and exquisite and excellent craft, people hearten, will give full play to the aesthetic feeling, can yet be regarded as a perfect combination of creativity and technology.

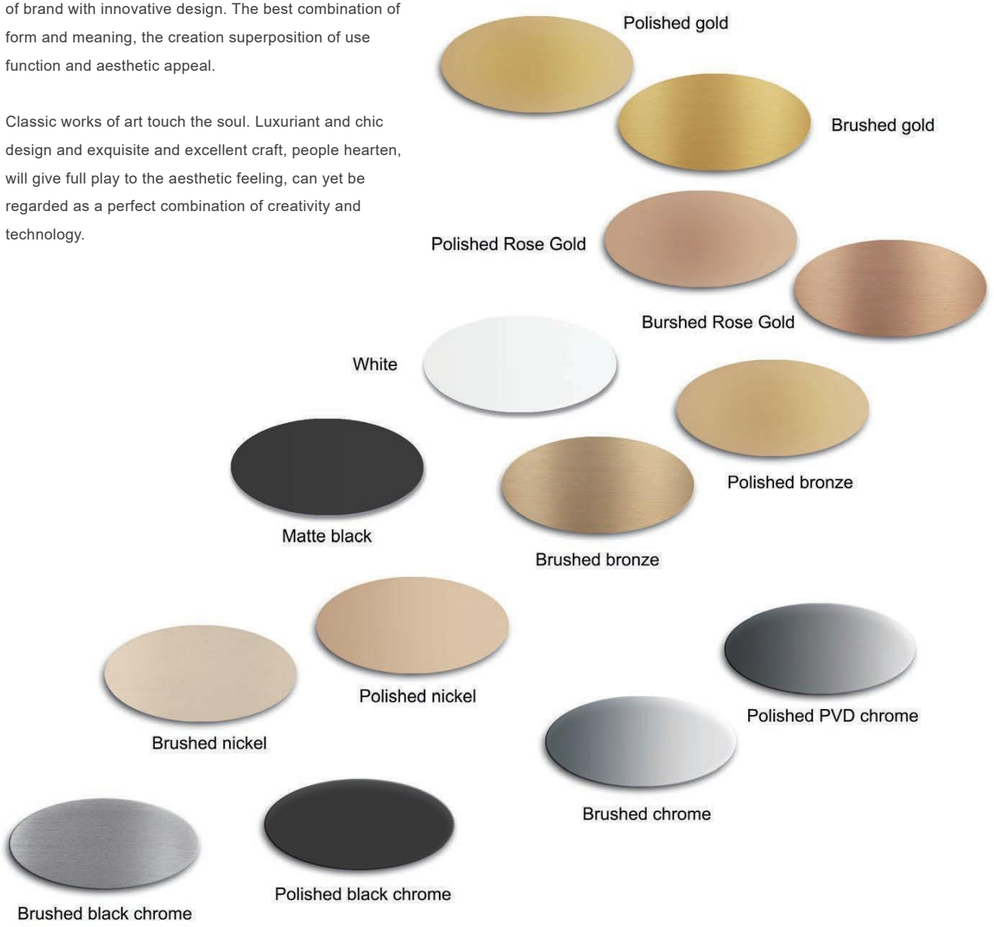

CERTIFICATE



Lever Handle



Door Cylinder



Door Hinge



Lever Handle



Fire-Exit Hardware



Panic Hardware



Door closer



Door closer



Door closer

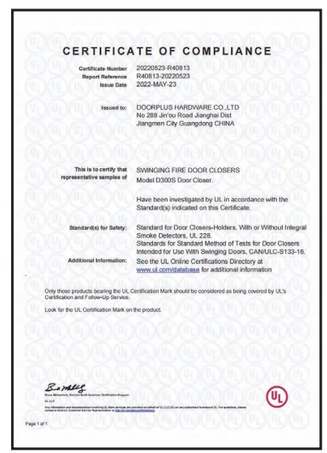

Door closer



Door closer



Door closer


MORTISE LOCK

Requirements (classified)

BS EN 12209:2016 classifes mechanically operated locks, latches and locking plates using an 8 digit coding system (see below). To avoid a greater proliferation of boxes, certain features have been “doubled up”: e.g. door mass and closing force; corrosion and temperature resistance.)

1	2	3	4	5	6	7	8
Category of use	Durability and force on latch bolt	Door mass and closing force	Suitability for use on fire resisting and/or smoke control doors	Safety	Corrosion resistance and temperature	Security and drill resistance	Key identification of lever locks

Digit 1 Category of use

Three categories of use are identifed:

Grade 1: for use in situations where the user has a high incentive to exercise care and there is only a small chance of misuse, e.g. residential doors

Grade 2: for use in situations where the user has some incentive to exercise care but where some misuse is likely, e.g. offce doors

Grade 3: for use in situations where the user has little incentive to exercise care and there is a high chance of misuse, e.g. doors in public buildings

Digit 2 Durability

Nine grades are identifed. There are three grades for single bolt deadlocks, or 2-bolt locks with no side load on the latch bolt, with fgures for the minimum number of cycles as shown below:

	Normal Latch Action (No side load)	Split Latch Action		Deadbolt Manually Locking	Deadbolt automatically locking	Snib Mechanism
		By Key	By Handle			
A	50,000	12,500	37,500	12,500	500,000	10,000
B	100,000	25,000	75,000	25,000	100,000	25,000
C	200,000	50,000	150,000	50,000	200,000	25,000

In addition there are six grades for 2-bolt locks with side load on the latch bolt with figures for the minimum number of cycles as shown below

Grade	Normal Latch Action		Split Latch action		Deadbolt manually locking	Deadbolt automatically locking	Snib Mechanism
	Number of cycle	Side Load	By key	By Handle			
L	100,000	25N	25,000	75,000	25,000	100,000	25,000
M	200,000	25N	50,000	150,000	50,000	200,000	25,000
R	100,000	50N	25,000	75,000	25,000	100,000	25,000
S	200,000	50N	50,000	150,000	50,000	200,000	25,000
W	100,000	120N	25,000	75,000	25,000	100,000	25,000
X	200,000	120N	50,000	150,000	50,000	200,000	25,000

Digit 3 Door mass and closing force

Ten grades are identified with maximum figures for the closing force of latches on doors of various masses as shown below. (NOTE: Closing force is from a standing start i.e. fully extended latch bolt in contact with striking plate at start of test)

Grade	0	1	2	3	4	5	6	7	8	9
Closing Force(N)	No Latch	50	50	50	25	25	25	15	15	15
Door Mass(KG)	-	< 100	< 200	>200	< 100	< 200	>200	< 100	< 200	>200

Digit 4 Suitability for use on fire resisting and/or smoke control doors: Four grades are identified as shown below:

Grade	Suitability
0	(Not Verified for us on fire resisting or smoke control doors)
A	Suitable for use on smoke control doors in accordance with EN1634 -3
B	Suitable for use on smoke control and fire resisting doors in accordance with EN1634 -1 or 2 where a latch is used to keep the door in a closed position
N	Suitable for use on smoke control and fire resisting doors in accordance with EN1634 -1 or 2 where the lock does not contribute to keep the door in a closed position

Digit 5 Safety

No requirement, but note: a lock conforming to this standard can at the same time be part of an exit device conforming to EN 179 or EN 1125

Digit 6 Corrosion and temperature resistance

Six grades are identified based on neutral salt spray (NSS) grades from EN 1670:2007, with and without resistance to extremes of temperature as shown below:

	Units	Grade					
		0	A	C	D	F	G
Time exposedto NSS	Hrs	0	24	96	240	96	240
Temperaturerange	℃	-	-	-	-	-10/+60	-10/+60

Digit 7 Security and drill resistance

Eight grades are identified with minimum requirements for methods of attack such as the application of torque,side load, end load, etc. as shown below:

Attack method	Units	Grade							
		0	1	2	3	4	5	6	7
Torque on knob of bored lock or latch set	Nm	-	10	15	-	-	-	-	-
Torque on handle of bored lock or latch set	Nm	-	20	30	-	-	-	-	-
Pulling force on knob of bored lock or latch set	kN	-	1	1.5	-	-	-	-	-
Drilling of security bolt prior to side load test	Mins	-	-	-	-	-	3	-	5
Side load on security bolt	kN	-	1	3	5	7	7	10	10
Projection of linear throw security bolt	mm	-	10	12	14	20	20	20	20
Projection of hooked security bolt	mm	-	5	5	5	5	5	5	5
Drilling of lock case prior to end load test	Mins	-	-	-	-	-	3	-	5
End load on security bolt without box protection	kN	-	1	2	4	5	5	6	6
End load on security bolt with box protection	kN	-	1	2	2	2	2	2	2

Attack method	Units	Grade							
		0	1	2	3	4	5	6	7
Result projection of linear throw security bolt	mm	-	8	10	12	17	17	17	17
Result projection of hooked security bolt	mm	-	3	3	3	3	3	3	3
Drilling of hooked security bolt prior to pulling test	Mins	-	-	-	-	-	3	-	5
Pulling force on hooked security bolt	kN	-	1	3	5	7	7	10	10
Drilling of anti-lift device prior to force attack	mins	-	-	-	-	-	3	-	5
Downward force on anti lift device	kN	-	1	3	4	5	5	6	6
Torque on locked follower	Nm	-	60	80	100	150	150	200	200
Torque on locked integral handle/knob of rim lock	Nm	-	Maximum Radius in mm						
Torque on strong key used to force lever lock	Nm	-	15	30	100	100	100	100	100
Load on box faces of box protected locking plate	kN	-	-	-	4	5	5	6	6
Side load on locking plat	kN	-	1	3	5	7	7	10	10
Pulling force on locking plate	kN	-	1	3	5	7	7	10	10
Lifting force on locking plate	kN	-	1	3	4	5	5	6	6

Digit 8 Key identification of lever locks

Nine grades are identified with minimum requirements for number of levers, number of differs, etc. as shown below:

Grade	Number of detaining elements	Number of effective differs	Number of differing step heights on key	No inter passing of Keys	Code Protection
0			No requirement		
A	3	100	2	Yes	No
B	5	1,000	3	Yes	Yes
C	5	10,000	3	Yes	Yes
D	6	4,000	3	Yes	Yes
E	6	20,000	3	Yes	Yes
F	7	6,000	4	Yes	Yes
G	7	50,000	4	Yes	Yes
H	8	100,000	4	Yes	Yes

Requirements (classified)

In addition to the classified requirements there are some non-classified requirements as follows:

Return force of latch bolt: Return force of latch bolt (2 mm from forend on the outward stroke) shall not be less than 2.5 N.

Strength of lever lock key: Lever lock key shall resist a torque of 2.5 Nm.

Strength of bolt actions: This requirement relates to follower actions (where applicable) and is in 2 parts:

1. With locking bolt blocked 2 mm from the forend, bolt throwing mechanism shall resist a torque on the follower of 30 Nm.
2. With latch bolt gripped, bolt withdrawal mechanism shall resist a torque on the follower of 20 Nm.

Minimum follower restoring torque: Restoring torque on latch bolt follower (5° from back stop position on return stroke) shall be at least 0.8 Nm.

Protection against removal from door: When door is closed and locked it shall not be possible to remove any exposed fixings:

a) From outside using any tool.

b) From inside (where security is required from the inside) using tools designed for use with any of the following types of screw head: hexagon, cross slot,hillips, Posidriv, Allen, Torx, Torx with pin

20001

Sash Lock

Classification code according to EN 12209										
3	X	9	1	0	G	-	B	0	2	0

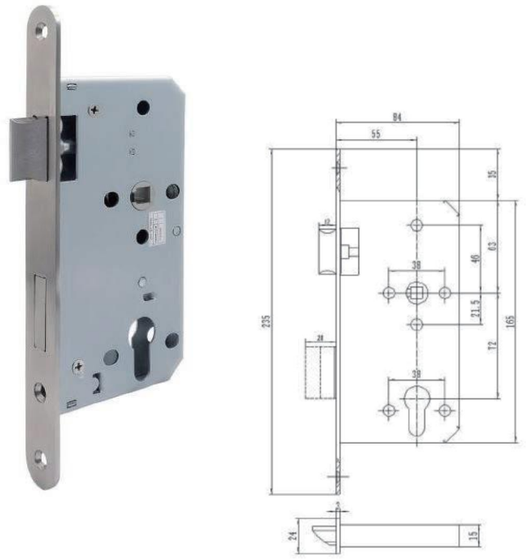

EN 12209 0905 260 min Steel Door

Mortice lock:

Round/Square forend

Forend plate width

-20/22/24mm

Backset sizes

-40/45/50/55/60/70/80/100mm

Distance

72mm

Follower size

-8*8mm / 9*9mm

Handing:

- Right hand
- Left hand

Material :

Forend: ANSI SUS304

Latch bolt: ANSI SUS304

Deadbolt : ANSI SUS304

Follower: ANSI SUS304

Striker plate: ANSI SUS304

Size			
Forend (mm)	Width (mm)	Backset (mm)	Follower (mm)
20/22/24	72	40-100	8*8

Accessories:

- Striker plate
- Plastic box
- Fixing screws

Mortice lock:

According to DIN18251-1

EN12209 Grade3

For wooden or steel door

Optional for rebated or non-rebated doors

Suitable for external fire and smoke doors

Prepared for profile cylinders

With key action

Deadbolt 2-turns

Options:

Backset(mm):40/45/50/55/60

70/80/100

Forend(mm):20/22/24

Finishing:SSS,PSS,PVD,SB,AB,AC

20002

Passage Lock

Classification code according to EN 12209										
3	X	9	1	0	G	-	B	0	2	0

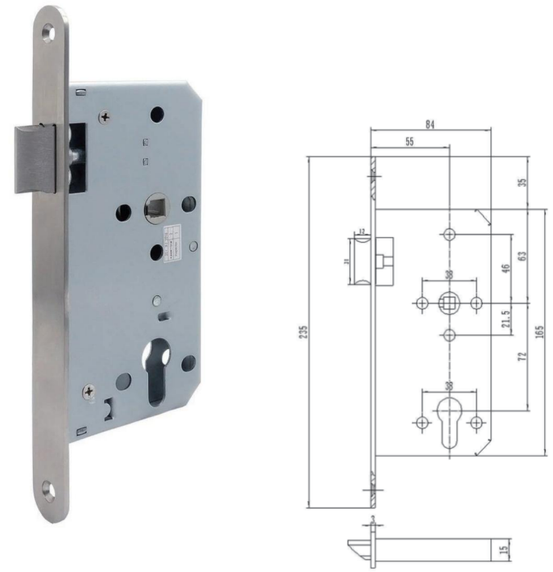

EN 12209 0905 260 min Steel Door

Mortice lock:

Round/Square forend

Forend plate width

-20/22/24mm

Backset sizes

-40/45/50/55/60/70/80/100mm

Distance

72mm

Follower size

-8*8mm / 9*9mm

Handing:

- Right hand
- Left hand

Material:

- Forend: ANSI SUS304
- Latch bolt: ANSI SUS304
- Follower: ANSI SUS304
- Striker plate: ANSI SUS304

Size			
Forend (mm)	Width (mm)	Backset (mm)	Follower (mm)
20/22/24	72	40-100	8*8

Accessories:

- Striker plate
- Plastic box
- Fixing screws

Mortice lock:

According to DIN 18251-1

EN12209 Grade 3

For wooden or steel door

Optional for rebated or non-rebated doors

Suitable for external fire and smoke doors

Latch bolt locks

Options:

Backset(mm):40/45/50/55/60 /70/80/100

Forend(mm):20/22/24

Finishing:SSS,PSS,PVD,SB,AB,AC

20003

Deadbolt Lock

Classification code according to EN 12209										
3	X	9	1	0	G	-	B	0	2	0

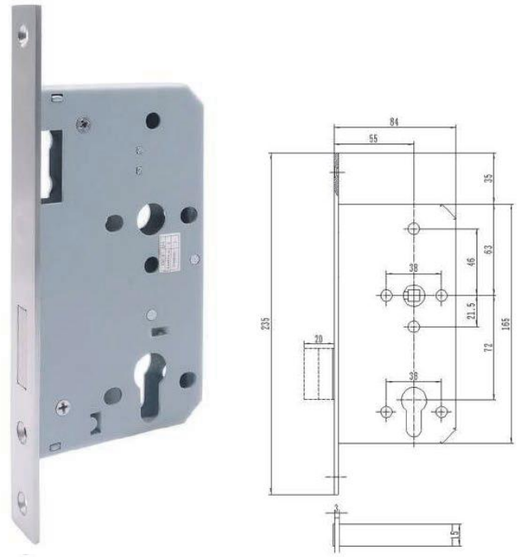

EN 12209 0905 260 min Steel Door

Size			
Forend (mm)	Width (mm)	Backset (mm)	Follower (mm)
20/22/24	72	40-100	8*8

Mortice lock:

Round/Square forend

Forend plate width

-20/22/24 mm

Backset sizes

-40/45/50/55/60/70/80/100 mm

Distance

72 mm

Material:

- Forend: ANSI SUS304
- Deadbolt: ANSI SUS304
- Striker plate: ANSI SUS304

Accessories:

- Striker plate
- Plastic box
- Fixing screws

Mortice lock:

According to DIN 18251-1

EN12209 Grade 3

For wooden or steel door

Optional for rebated or non-rebated doors

Suitable for external fire and smoke doors

Prepared for profile cylinders

With key action

Deadbolt 2-turns

Options:

Backset(mm):40/45/50/55/60/70/80/100

Forend(mm): 20/22/24

Finishing:SSS,PSS,PVD,SB,AB,AC

20006

Bathroom Lock

Classification code according to EN 12209										
3	X	9	1	0	G	-	B	0	2	0

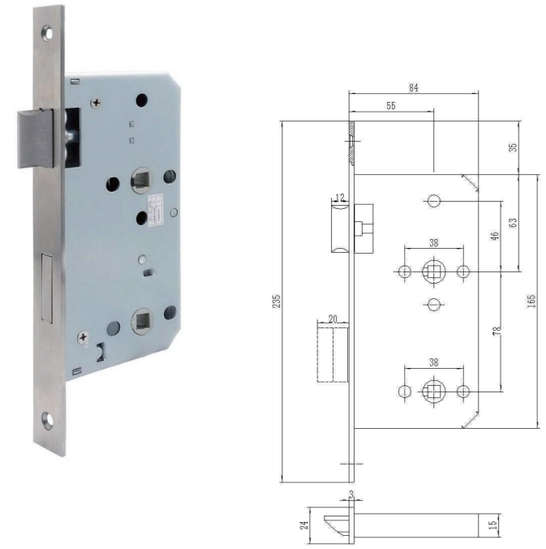

EN 12209 0905 260 min Steel Door

Size			
Forend (mm)	Width (mm)	Backset (mm)	Follower (mm)
20/22/24	72	55-60	8*8

Mortice lock:

WC type

Round/Square forend

Forend plate width

-20/22/24 mm

Backset sizes

-55/60 mm

Distance

78 mm

Follower size

-8*8mm / 9*9mm

Material:

Forend: ANSI SUS304

Latchbolt: ANSI SUS304

Deadbolt : ANSI SUS304

Striker plate: ANSI SUS304

Accessories:

- Striker plate
- Plastic box
- Fixing screws

Mortice lock:

According to DIN 18251-1

EN12209 Grade 3

For wooden or steel door

Optional for rebated or non-rebated doors

For bathroom doors

Deadbolt 1-turn

Options:

Backset(mm):55/60

Forend(mm):20/22/24

Finishing:SSS,PSS,PVD,SB,AB,AC

20018

Latchbolt Lock

Classification code according to EN 12209										
3	X	9	1	0	G	-	B	0	2	0

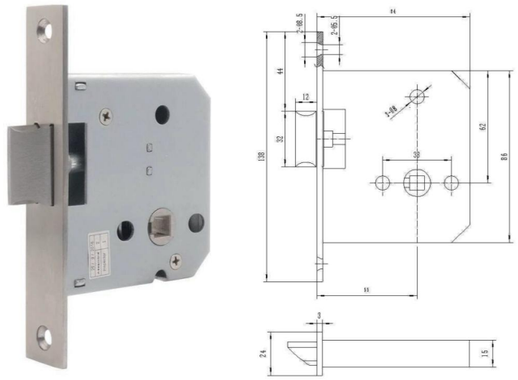

Mortice lock:

Round/Square forend

Forend plate width

-20/22/24 mm

Backset sizes

-55mm

Follower size

-8*8mm / 9*9mm

Handing:

- Right hand
- Left hand

Material:

- Forend: ANSI SUS304
- Latch bolt: ANSI SUS304
- Follower: ANSI SUS304
- Striker plate: ANSI SUS304

Size			
Forend (mm)	Width (mm)	Backset (mm)	Follower (mm)
20/22/24	-	55	8*8

Mortice lock:

According to DIN 18251-1

EN12209 Grade 3

For wooden or steel door

For single-leaf doors

Optional for rebated or non-rebated doors

Suitable for external fire and smoke doors

Prepared for profile cylinders

Accessories:

- Striker plate
- Plastic box
- Fixing screws

Options:

Backset(mm):55

Forend(mm):20/22/24

Finishing:SSS,PSS,PVD,SB,AB,AC

20019

Deadbolt Lock

Classification code according to EN 12209										
3	X	9	1	0	G	-	B	0	2	0

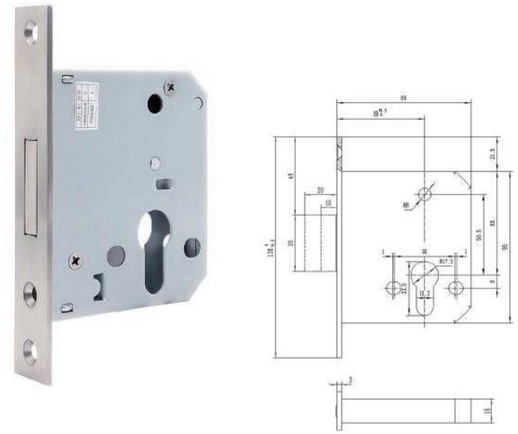

Mortice lock:

Round/Square forend

Forend plate width

-20/22/24 mm

Backset sizes

-55mm

Material:

- Forend: ANSI SUS304
- Deadbolt: ANSI SUS304
- Striker plate: ANSI SUS304

Size			
Forend (mm)	Width (mm)	Backset (mm)	Follower (mm)
20/22/24	-	55	-

Mortice lock:

According to DIN 18251-1

EN12209 Grade 3

For single-leaf doors

Optional for rebated or non-rebated doors

Suitable for external fire and smoke doors

Prepared for profile cylinders

With key action

Deadbolt 2-turns

Accessories:

- Striker plate
- Plastic box
- Fixing screws

Options:

Backset(mm):55

Forend(mm):20/22/24

Finishing:SSS,PSS,PVD,SB,AB,AC

20004

72 Roller Lock

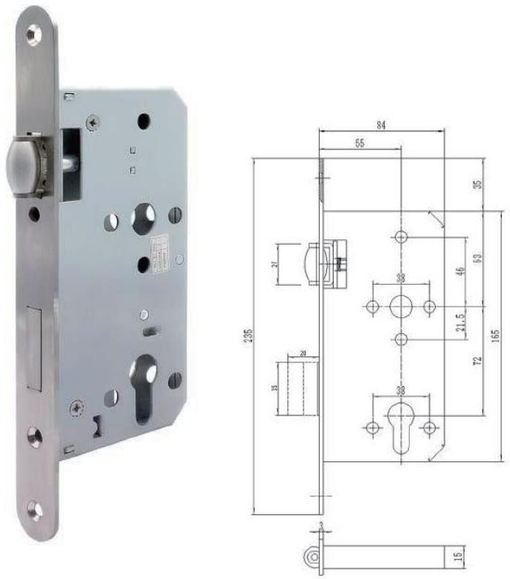

Mortice lock:

Round/Square forend

Forend plate width

-20/22/24 mm

Backset sizes

-40/45/50/55/60/70/80/100mm

Distance

72 mm

Follower size

-8*8mm / 9*9mm

Material:

- Forend: ANSI SUS304
- Rollerbolt: ANSI SUS304
- Deadbolt: ANSI SUS304
- Striker plate: ANSI SUS304

Size			
Forend (mm)	Width (mm)	Backset (mm)	Follower (mm)
20/22/24	72	40-100	8*8

Accessories:

- Striker plate
- Plastic box
- Fixing screws

Mortice lock:

According to DIN 18251-1

EN12209 Grade 3

For sliding doors

Suitable for external fire and smoke doors

Prepared for profile cylinders

With key action

Deadbolt 2-turn

Options:

Backset(mm):40/45/50/55/60/70/80/100

Forend(mm): 20/22/24

Finishing:SSS,PSS,PVD,SB,AB,AC

20005

Class Room Lock

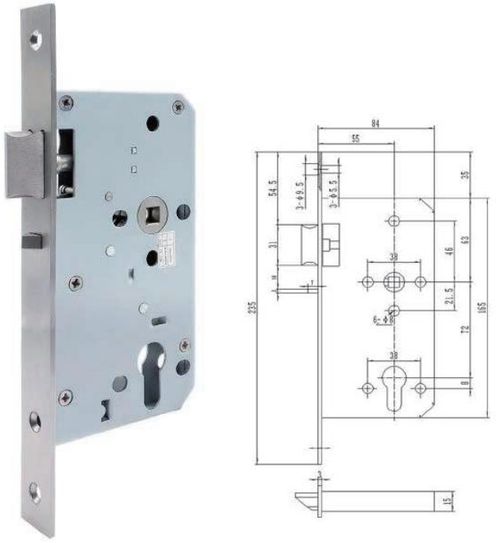

Mortice lock:

Round/Square forend

Forend plate width

-20/22/24 mm

Backset sizes

-40/45/50/55/60/70/80/100mm

Distance

72 mm

Follower size

-8*8mm / 9*9mm

Material:

- Forend: ANSI SUS304
- Latchbolt: ANSI SUS304
- Striker plate: ANSI SUS304

Size			
Forend (mm)	Width (mm)	Backset (mm)	Follower (mm)
20/22/24	72	50-60	8*8

Accessories:

- Striker plate
- Plastic box
- Fixing screws

Mortice lock:

According to DIN 18251-1

EN12209 Grade 3

For wooden or steel door

For single-leaf doors

Optional for rebated or non-rebated doors

Suitable for doors where single action of escape is required

Options:

Backset(mm): 55/60

Forend(mm): 20/22/24

Finishing: SSS,PSS,PVD,SB,AB,AC

20007

Night Latch Lock

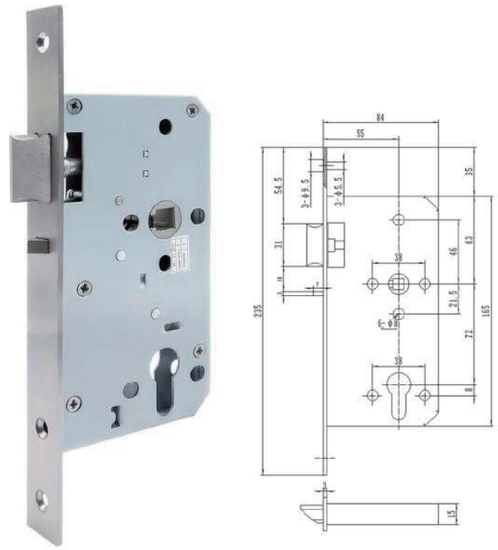

Size			
Forend (mm)	Width (mm)	Backset (mm)	Follower (mm)
20/22/24	72	40-100	8*8

Mortice lock:

According to DIN 18251-1

EN12209 Grade 3

For sliding doors

Optional for rebated or non-rebated doors

Suitable for doors where single action of escape is required

Mortice lock:

Round/Square forend

Forend plate width

-20/22/24 mm

Backset sizes

-40/45/50/55/60/70/80/100mm

Distance

72 mm

Follower size

-8*8mm / 9*9mm

Material:

- Forend: ANSI SUS304
- Rollerbolt: ANSI SUS304
- Deadbolt: ANSI SUS304
- Striker plate: ANSI SUS304

Accessories:

- Striker plate
- Plastic box
- Fixing screws

Options:

Backset(mm):40/45/50/55/60/70/80/100

Forend(mm): 20/22/24

Finishing:SSS,PSS,PVD,SB,AB,AC

20010

Anti-panic Lock

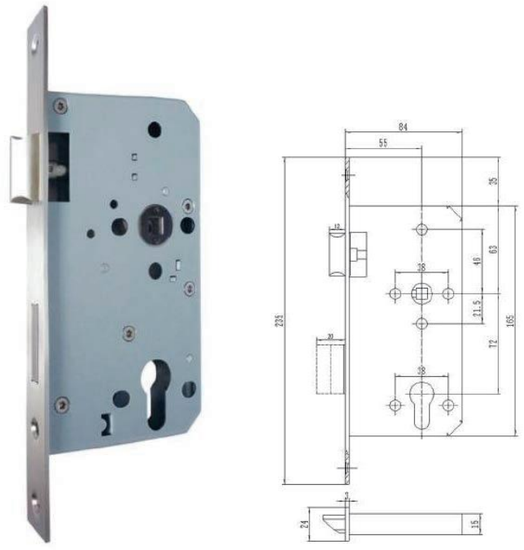

Size			
Forend (mm)	Width (mm)	Backset (mm)	Follower (mm)
20/22/24	72	55-60	8*8

Mortice lock:

Mortice lock

According to DIN 18251-1

EN12209 Grade 3

For sliding doors

Suitable for external fire and smoke doors

With key action

Deadbolt 1-turn

Functions:

The lever/knob outside is at natural state

When unlocked the door can be operated from outside by key

When unlocked the door can be operated from inside without key,

but pushing touch bar/handle, the Escape side is in accord with

opening direction

Mortice lock:

Round/Square forend

Forend plate width

-20/22/24 mm

Backset sizes

-55/60mm

Distance

72 mm

Follower size

-8*8mm / 9*9mm

Material:

- Forend: ANSI SUS304
- Rollerbolt: ANSI SUS304
- Deadbolt: ANSI SUS304
- Striker plate: ANSI SUS304

Accessories:

- Striker plate
- Plastic box
- Fixing screws

Options:

Backset(mm): 55/60

Forend(mm): 20/22/24

Finishing: SSS,PSS,PVD,SB,AB,AC

20011

85 Sash Lock

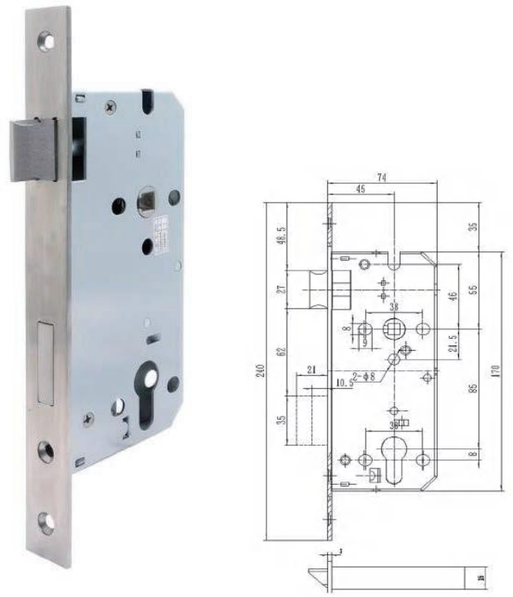

Size			
Forend (mm)	Width (mm)	Backset (mm)	Follower (mm)
20/22/24	85	40-80	8*8

Mortice lock:

According to DIN 18251-1

EN12209 Grade 3

For wooden or steel door

For single-leaf doors

Optional for rebated or non-rebated doors

Suitable for external fire and smoke doors

Prepared for profile cylinders

With key action

Deadbolt 2-turns

Mortice lock:

Round/Square forend

Forend plate width

-20/22/24 mm

Backset sizes

-40/45/50/55/60/70/80 mm

Distance

-85mm

Follower size

-8*8mm / 9*9mm

Handing:

- Right hand
- Left hand

Material:

- Forend: Stainless steel
- Latch bolt: Zinc alloy, REV
- Deadbolt: Zinc alloy
- Iron with stainless steel cover
- Iron with Nickel plating
- Follower: Iron with Nickel plating
- Striker plate: Stainless steel

Accessories:

- Striker plate
- Plastic box
- Fixing screws

Options:

Backset(mm):40/45/50/55/60/70/80

Forend(mm): 20/22/24

Finishing:SSS,PSS,PVD,SB,AB,AC

20012

85 Roller Lock

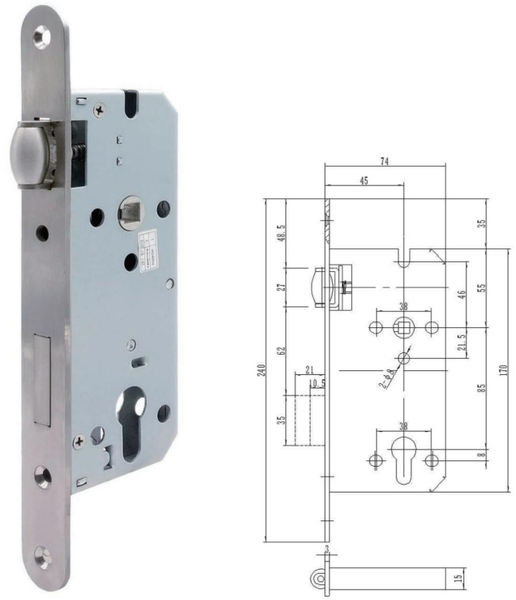

Size			
Forend (mm)	Width (mm)	Backset (mm)	Follower (mm)
20/22/24	85	40-80	8*8

Mortice lock:

According to DIN 18251-1

EN12209 Grade 3

For sliding doors

Suitable for external fire and smoke doors

Prepared for profile cylinders

With key action

Deadbolt 2-turns

Mortice lock:

Round/Square forend

Forend plate width

-20/22/24 mm

Backset sizes

-40/45/50/55/60/70/80mm

Distance

85mm

Material:

- Forend:	ANSI SUS304
- Roller bolt:	ANSI SUS304
- Deadbolt:	ANSI SUS304
- Striker plate:	ANSI SUS304

Accessories:

- Striker plate
- Plastic box
- Fixing screws

Options:

Backset(mm):40/45/50/55/60/70/80

Forend(mm): 20/22/24

Finishing:SSS,PSS,PVD,SB,AB,AC

20014

Narrow Type Lock

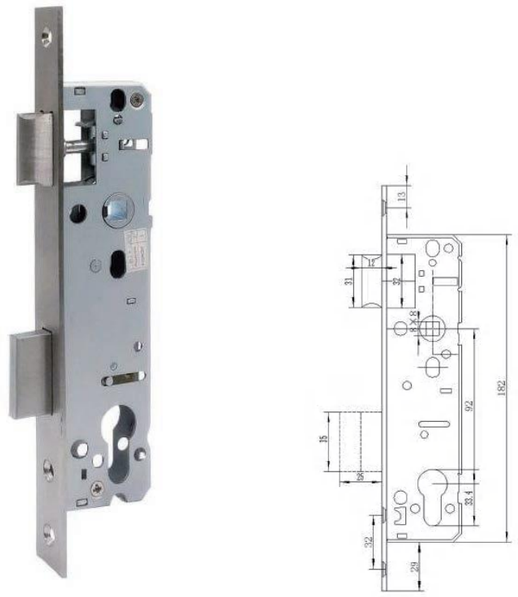

Size			
Forend (mm)	Width (mm)	Backset (mm)	Follower (mm)
20/22/24	92	30-40	8*8

Mortice lock:

According to DIN 18251-1

EN12209 Grade 2

For aluminium door

For single-leaf doors

For non-rebated doors

Prepared for profile cylinders

With key action

Deadbolt 2-turns

Mortice lock:

Round/Square forend

Forend plate width

-20/22/24 mm

Backset sizes

-30/35/40 mm

Distance

-92mm

Follower size

-8*8mm / 9*9mm

Handing:

- Right hand
- Left hand

Material:

- Forend: Stainless steel
- Latch bolt: Zinc alloy, REV
- Deadbolt: Zinc alloy
- Follower: Iron with Nickel plating
- Striker plate: Stainless steel

Accessories:

- Striker plate
- Plastic box
- Fixing screws

Options:

Backset(mm):30/35/40

Forend(mm):20/22/24

Finishing:SSS,PSS,PVD,SB,AB,AC

20028

Double Hook Lock



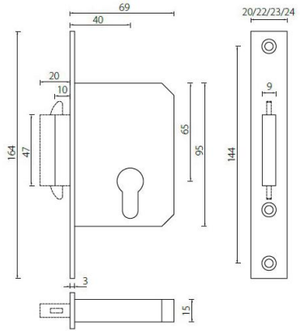

Size			
Forend (mm)	Width (mm)	Backset (mm)	Follower (mm)
20/22/24	-	55	-

Mortice lock:

According to DIN18251-1

EN12209 Grade 3

For sliding doors

Suitable for external fire and smoke doors

Prepared for profile cylinders

2-turns

Mortice lock:

Round / Square forend

Forend plate width

-20/22/24

Backset sizes

-55mm

Handing:

- Right Hand
- Left Hand

Material:

- Forend: Stainless steel
- Bolt: Stainless steel
- Striker: Stainless steel

Accessories:

- Striker plate
- Plastic box
- Fixing screws

Options:

Backset(mm):55

Forend(mm):20/22/24

Round/Square

Finishing:SSS,PSS,PVD,SB,AB,AC

20029

Hook Lock

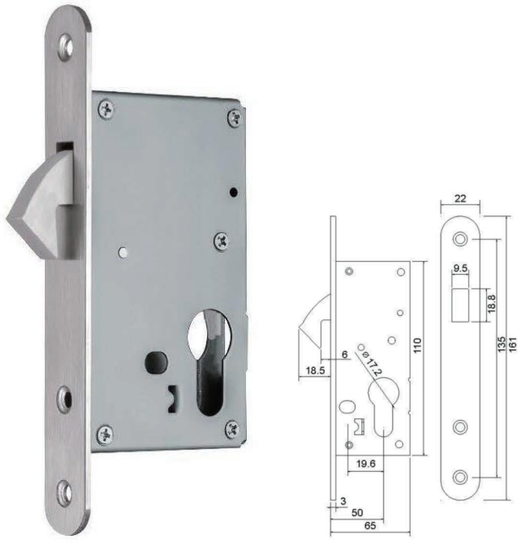

Size			
Forend (mm)	Width (mm)	Backset (mm)	Follower (mm)
22	-	50	-

Mortice lock:

For sliding doors

Suitable for external fire and smoke doors

Prepared for profile cylinders

1-turn

Mortice lock:

Round forend

Forend plate width -22

Backset sizes

-50mm

Handing:

- Right hand
- Left hand

Accessories:

- Striker plate
- Fixing screws

Options:

Backset(mm):50

Forend(mm):22 Round

Finishing:SSS,PSS,PVD,SB,AB,AC

20030

Passage Latch



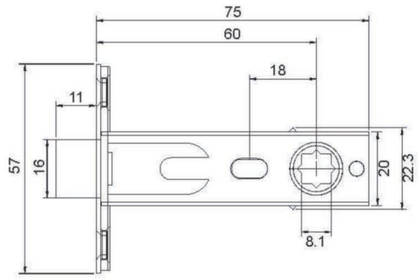

Size			
Forend (mm)	Width (mm)	Backset (mm)	Follower (mm)
-	-	60	8

Mortice lock:

Backset:60mm

Function:Passage

Handing:

- Right Hand
- Left Hand

Accessories:

- Striker plate
-Plastic box
- Fixing screws

Options:

Backset(mm):60

Finishing:SSS,PSS,PVD,SB,AB,AC

20031

Passage Latch



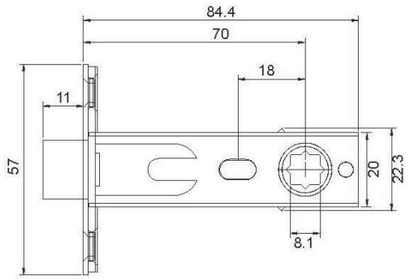

Size			
Forend (mm)	Width (mm)	Backset (mm)	Follower (mm)
-	-	70	8

Mortice lock:

Backset:70mm

Function:Passage

Handing:

- Right Hand
- Left Hand

Accessories:

- Striker plate
- Plastic box
- Fixing screws

Options:

Backset(mm):70

Finishing:SSS,PSS,PVD,SB,AB,AC

20032

Privacy Latch



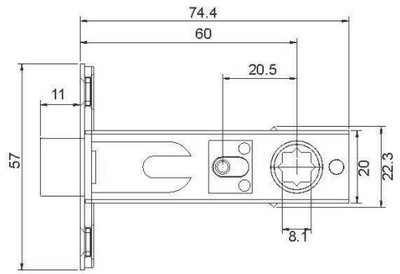

Size			
Forend (mm)	Width (mm)	Backset (mm)	Follower (mm)
-	-	60	8

Mortice lock:

Backset:60mm

Function:Privacy

Handing:

- Right Hand
- Left Hand

Accessories:

- Striker plate
- Plastic box
- Fixing screws

Options:

Backset(mm):60

Finishing:SSS,PSS,PVD,SB,AB,AC

20033

Privacy Latch



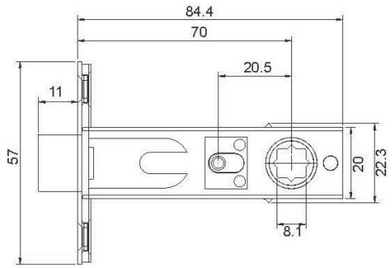

Size			
Forend (mm)	Width (mm)	Backset (mm)	Follower (mm)
-	-	70	8

Mortice lock:

Backset:70mm

Function:Privacy

Handing:

- Right Hand
- Left Hand

Accessories:

- Striker plate
- Plastic box
- Fixing screws

Options:

Backset(mm):70

Finishing:SSS,PSS,PVD,SB,AB,AC

20034

Magnetic latch



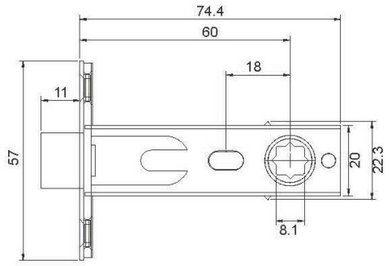

Size			
Forend (mm)	Width (mm)	Backset (mm)	Follower (mm)
-	-	60	8

Mortice lock:

Backset:60mm

Function:Privacy

Handing:

- Right Hand
- Left Hand

Accessories:

- Striker plate
- Plastic box
- Fixing screws

Options:

Backset(mm):60

Finishing:SSS,PSS,PVD,SB,AB,AC

20035

Magnetic Latch



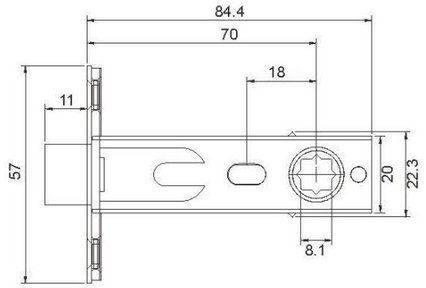

Size			
Forend (mm)	Width (mm)	Backset (mm)	Follower (mm)
-	-	70	8

Mortice lock:

Backset:70mm

Function:Passage

Handing:

- Right Hand
- Left Hand

Accessories:

- Striker plate
- Plastic box
- Fixing screws

Options:

Backset(mm):70

Finishing:SSS,PSS,PVD,SB,AB,AC

20036

Magnetic latch



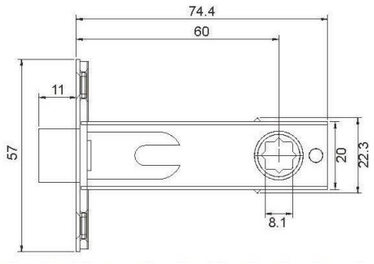

Size			
Forend (mm)	Width (mm)	Backset (mm)	Follower (mm)
-	-	60	8

Mortice lock:

Backset:60mm

Function:Passage

Handing:

- Right Hand
- Left Hand

Accessories:

- Striker plate
- Plastic box
- Fixing screws

Options:

Backset(mm):60

Finishing:SSS,PSS,PVD,SB,AB,AC

20037

Magnetic latch



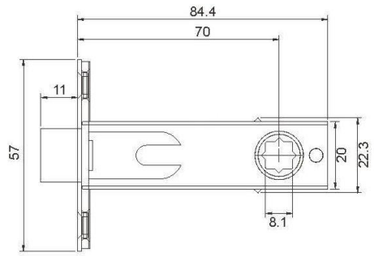

Size			
Forend (mm)	Width (mm)	Backset (mm)	Follower (mm)
-	-	70	8

Mortice lock:

Backset:70mm

Function:Passage

Handing:

- Right Hand
- Left Hand

Accessories:

- Striker plate
- Plastic box
- Fixing screws

Options:

Backset(mm):70

Finishing:SSS,PSS,PVD,SB,AB,AC

20038

Latch



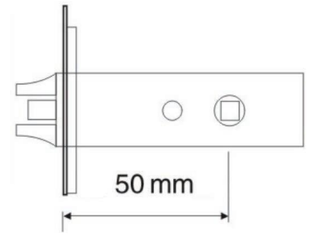

Size			
Forend (mm)	Width (mm)	Backset (mm)	Follower (mm)
-	-	60	8

Mortice lock:

Backset：50mm

Handing:

- Right Hand
- Left Hand

Accessories:

- Striker plate
- Plastic box
- Fixing screws

20039

Adjustable Latch



Mortice lock:

Special Features:Adjustable

Backset:60/70mm

Handing:

- Right Hand
- Left Hand

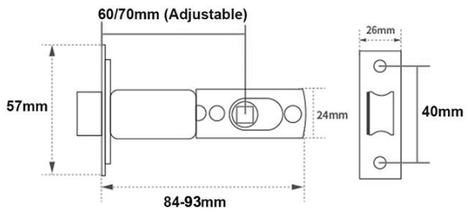

Size			
Forend (mm)	Width (mm)	Backset (mm)	Follower (mm)
-	-	60/70	8

Accessories:

- Striker plate
- Plastic box
- Fixing screws

Options:

Backset(mm):60/70

Finishing:SSS,PSS,PVD,SB,AB,AC

20040

Deadbolt



Mortice lock:

Lock Type：Deadbolt

Special Features:Adjustable

Backset:60/70mm

Handing:

- Right Hand
- Left Hand

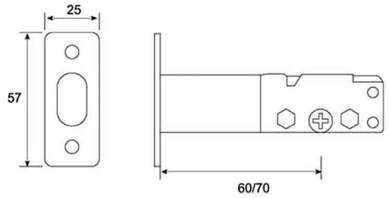

Size			
Forend (mm)	Width (mm)	Backset (mm)	Follower (mm)
-	-	60/70	8

Accessories:

- Striker plate
- Plastic box
- Fixing screws

LOCK CYLINDER

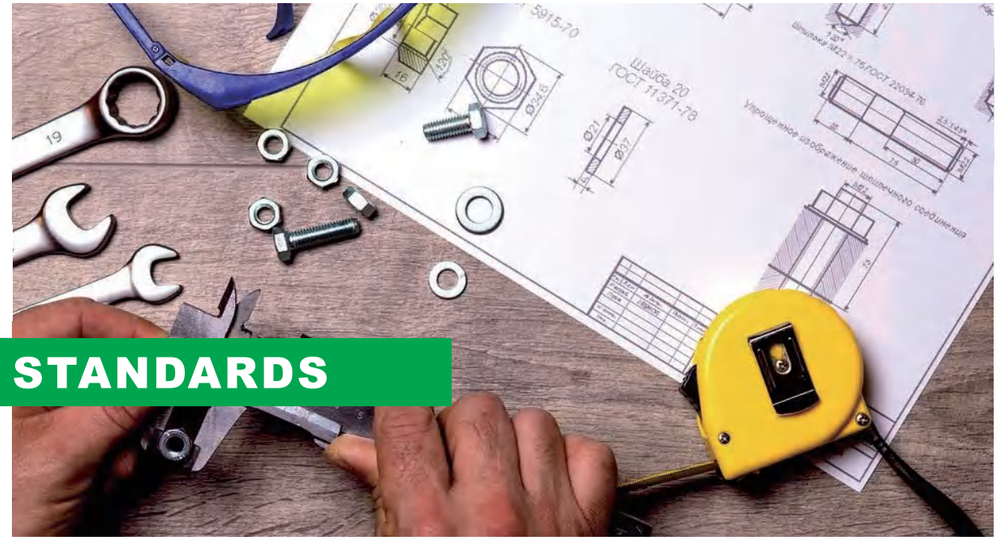

STANDARDS

CLASSIFICATIONS

DIN EN 1303 - CYLINDERS FOR LOCKS
The cylinders that GBM Solutions supply all comply with DIN EN 1303 where applicable.

Digit 1 - Category of use
1 category is identified.
Grade 1 For use by people with a high incentive to exercise care and with a small chance of misuse.

Digit 2 - Durability
3 grades are identified according to the number of test cycles achieved.
Grade 4 25 000 cycles
Grade 5 50 000 cycles
Grade 6 100 000 cycles

Digit 3 - Door mass
No requirement

Digit 4 - Fire resistance
2 grades are identified.
Grade 0 Not suitable for fire/smoke resistant door assemblies
Grade 1 Suitable for fire/smoke resistant door assemblies subject to satisfactory assessment of the contribution of the cylinder to the fire resistance of the specified fire/smoke door assemblies. Such assesment is beyond the scope of this European standard (see EN 1634-1).box 4), it must be possible to demonstrate compliance with the Essential Requirements of the Construction Products(Amendments) Regulations.

Digit 5 - Safety
No requirement

Digit 6 - Corrosion and temperature resistance
4 grades are identified.
Grade 0 No corrosion or temperature resistance requirement
Grade A EN 1670 grade 3 corrosion resistance (96 H NSS)
No temperature resistance requirements
Grade B No corrosion resistance: resistance to -20/+80 C temperature extremes
Grade C EN 1670 Grade 3 corrision resistance: resistance to -20/+80C temperature extremes

Note. No distinction is made between the inside and the outside of either the cylinder and/or the door. On completion of the test, the cylinder must operate.

Digit 7 - Key related security
Consists of a combination of several requirements.

Grade	Min. number of effective different key changes	Min. number of moving pins/tumblers
1	100	2
2	300	3
3	15.000	5
4	30.000	5
5	30.000	6
6	100.000	6

Note
Various safety mechanisms integrated in the locking cylinder

106



guarantee the maximum safety of a locking cylinder. Apart from a high number of pin tumblers, which reduce the risk of unauthorized unlocking, the following functions in particular prevent a forced opening:

Drilling protection
Pull protection

Digit 8 - Attack resistance
Consists of a combination of several requirements.

Grade	**0**	**1**	**2**
Drilling time	-	3/5 min.	5/10 min.
Chissel attack	-	30 blows	40 blows
Twisting attack	-	20 twists	30 twists
Extraction (pull load)	-	15 kN	15 kN
Torque	-	20 Nm	30 Nm

TERMINOLOGY
Locking cylinders are categorized according to:

A: Frontview



Euro profile

B: Sideview

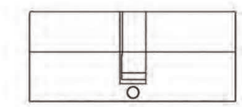

Double cylinder

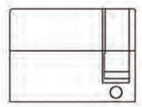

Half cylinder

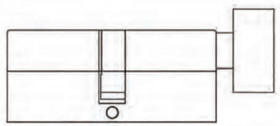

Thumb turn cylinder

The definition of important components and characteristics of locking cylinders in this catalogue follows generally the terminology according to EN 1303 with DIN 18252/09-1999.

BS EN 1303 : 2015

BS EN 1303 : 2015 Cylinders for locks

Products tested to British and European standards provide greater durability, longer warranty periods, peace of mind and evidence of professional specification.

This European standard applies to cylinders for such locks as are normally used in buildings and are designed to be used with cylinders.

Under the standard each product is tested and classified accordingly to show its compliance. The identification of an 8-digit code is visible on the individual product. Each digit represents a category and how it measured against the standard to which it was tested.

Digit 1 - Category of use

One category is identified:

Grade 1: Keys shall resist a torque of 2.5Nm and still be usable. This is for use by people with a high incentive to exercise care and with a small chance of misuse.

Digit 2 – Durability

Three grades of durability classify cylinders as either grade 4, 5, or 6 based on the number of test cycles achieved

Grade 4 : 25,000 cycles.

Grade 5 : 50,000 cycles.

Grade 6 : 100,000 cycles.

Digit 3 – Door mass

Grade 0 - No requirement.

Digit 4 – Fire resistance

Cylinders are classified as either grade 0 , A or B

Grade 0 : Not approved for use on fire/smoke door assemblies

Grade A : Cylinders shall be subjected to a smoke test in accordance with EN 1634-3 or materials for the parts of the cylinder responsible for preventing any leakage of smoke shall have a melting point not less than 840 °C

Grade B : Cylinders shall be fire tested in accordance with current fire test requirements of EN 1634-1 or EN 1634-2 or materials for the parts of the cylinder responsible for preventing the spread of fire shall have a melting point not less than 300 °C

Digit 5 – Safety

Grade 0 - No requirement.

Digit 6 – Corrosion and temperature resistance

Cylinders are classified as either grade 0, A, B or C:

Grade 0 : No corrosion or temperature requirement.

Grade A : high corrosion resistance, no temperature requirement.

Grade B : No corrosion requirement, temperature requirement from to - 25 ºC and + 65 ºC

Grade C : high corrosion resistance, temperature requirement from to - 25 ºC and + 65 ºC

Note : No distinction is made between the inside and the outside of either the cylinder and/or the door. On completion of the test, the cylinder must operate using a maximum 1.5 Nm torque on the key at both - 25 ºC and + 65 ºC.

Digit 7 – Key Security

Cylinders are classified in grades 1 to 6, where 6 is the highest. The grade of security can differ from one side of a double cylinder to the other. The table below provides a summary of the main security requirements.

Requirement	Unit	Grades					
		1	2	3	4	5	6
Min number of effective differs	Number	100	300	15,000	30,000	30,000	100,000
Min number of movable detainers	Number	2	3	5	5	6	6
Max number of identical steps	%	100	70	60	60	60	50
Max number of identical adjacent steps	Number	-	2	2	2	2	2
Direct coding on key	-	-	-	No	No	No	No
Operation of security mechanism (interpassing) torque	Nm	1.5	1.5	1.5	1.5	1.5	1.5
Torque resistance of plug/cylinder	Nm	2.5	5	15	15	15	15

Digit 8 – Attack resistance

Cylinders are classified grades 0 to 5 where 5 is the highest. The table below provides a summary of the main requirements.

Requirement	Unit	Grades				
		0	A	B	C	D
Resistance to drilling (nett drilling time)	Minutes	-	3 to 5	5 to 10	3 to 5	5 to 10
Resistance to chisel attack (number of defined blows)	Number	-	40	40	30	40
Resistance to twisting attack (no. of defined twists)	Number	-	20	30	20	30
Resistance to plug/ cylinder extraction (force)	kN minutes	-	-	-	10 5 to 15	15 5 to 15
Torque resistance of plug/cylinder (torque)	Nm	-	20	No	No	No

30001



EN 1303

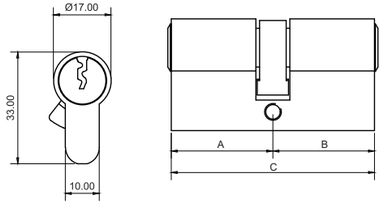

Europe Profile Double Cylinder

DOOR CYLINDER CLASS							
1	6	0	0	0	C	6	0

No.	A	B	C
30001 -60	30	30	60
30001 -70	35	35	70
30001 -80	40	40	80
30001 -90	45	45	90
30001 -100	50	50	100
30001 -110	55	55	110

30002



EN 1303

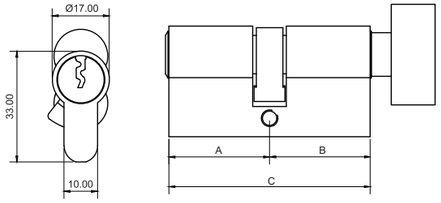

Europe Profile Thumb Turn Cylinder

DOOR CYLINDER CLASS							
1	6	0	0	0	C	6	0

No.	A	B	C
30002 -60	30	30	60
30002 -70	35	35	70
30002 -80	40	40	80
30002 -90	45	45	90
30002 -100	50	50	100
30002 -110	55	55	110

Product description

Material: Solid Brass Body And Plug

Keys: 3 Brass Keys / 5 Brass Keys

Key Type: Normal Key, Computer Key

Key Management Function: Master Key, Grand Master Key, Construction Key, Keyed Alike,

Pins Standard: 6 Pin

Standard: Conforms To EN1303

Over 100,000 effective differs

Fastening Screw: 65mm (standard), Other Lengths Will Be Available According To Different Backset.

30008



EN 1303

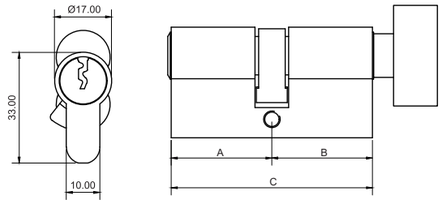

Europe Profile Thumb Turn Cylinder

DOOR CYLINDER CLASS							
1	6	0	0	0	C	6	0

No.	A	B	C
30008 -60	30	30	60
30008 -70	35	35	70
30008 -80	40	40	80
30008 -90	45	45	90
30008 -100	50	50	100
30008 -110	55	55	110

30009



EN 1303

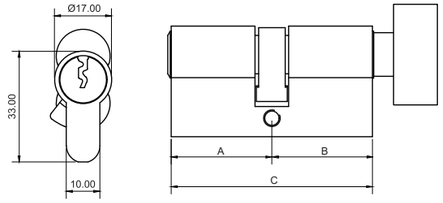

Europe Profile Thumb Turn Cylinder

DOOR CYLINDER CLASS							
1	6	0	0	0	C	6	0

No.	A	B	C
30009 -60	30	30	60
30009 -70	35	35	70
30009 -80	40	40	80
30009 -90	45	45	90
30009 -100	50	50	100
30009 -110	55	55	110

Product description

Material: Solid Brass Body And Plug

Keys: 3 Brass Keys / 5 Brass Keys

Key Type: Normal Key, Computer Key

Key Management Function: Master Key, Grand Master Key, Construction Key, Keyed Alike,

Pins Standard: 6 Pin

Standard: Conforms To EN1303

Over 100,000 effective differs

Fastening Screw: 65mm (standard), Other Lengths Will Be Available According To Different Backset.

30003



EN 1303

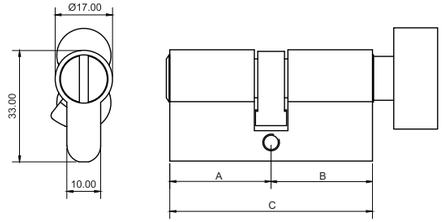

Europe Profile Privacy Cylinder

No.	A	B	C
30003 -60	30	30	60
30003 -70	35	35	70
30003 -80	40	40	80
30003 -90	45	45	90
30003 -100	50	50	100
30003 -110	55	55	110

30004



EN 1303

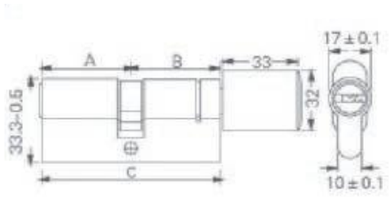

Europe Profile Thumb Turn Cylinder

No.	A	B	C
30004 -60	30	30	60
30004 -70	35	35	70
30004 -80	40	40	80
30004 -90	45	45	90
30004 -100	50	50	100
30004 -110	55	55	110

Product description

Material: Solid Brass Body And Plug

Keys: 3 Brass Keys / 5 Brass Keys

Key Type: Normal Key, Computer Key

Key Management Function: Master Key, Grand Master Key, Construction Key, Keyed Alike,

Pins Standard: 6 Pin

Standard: Conforms To EN1303

Over 100,000 effective differs

Fastening Screw: 65mm (standard), Other Lengths Will Be Available According To Different Backset.

30005



EN 1303

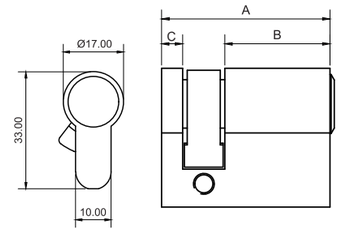

Europe Half Cylinder

No.	A	B	C
30005-40	40	30	10
30005-45	45	35	10
30005-50	50	40	10
30005-55	55	45	10

30010



EN 1303

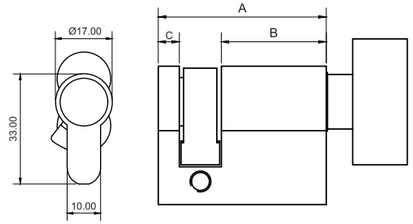

Europe Half Thumb Turn Cylinder

No.	A	B	C
30010-40	40	30	10
30010-45	45	35	10
30010-50	50	40	10
30010-55	55	45	10

Product description

Material: Solid Brass Body And Plug

Keys: 3 Brass Keys / 5 Brass Keys

Key Type: Normal Key, Computer Key

Key Management Function: Master Key, Grand Master Key, Construction Key, Keyed Alike,

Pins Standard: 6 Pin

Standard: Conforms To EN1303

Over 100,000 effective differs

Fastening Screw: 65mm (standard), Other Lengths Will Be Available According To Different Backset.