DOORPLUS HARDWARE CO.,LTD

DOORPLUS HARDWARE CO.,LTD
617 No.19 Dongning road Jianghai
Dist Jiangmen Guangdong China 529000
E-mail: anna@doorplus.net
Web: www.doorplus.cc



DOOR PLUS®

Architectural Hardware

PRODUCT CATALOGUE

2025

- DOORPLUS HARDWARE CO.,LTD -



ABOUT US

DOORPLUS Hardware Co.,Ltd is a manufacturer and supplier of architectural hardware to the construction industry,is located at Jiangmen city,Guangdong province in China Near HK and Macao.Doorplus products are both durable and versatile.

The Doorplus quality range of Architectural Hardware includes door hinge,door lever handles,pull handles,door stoppers,series of door-used hardware and small size metal components,etc.

Our focus on customers service,high quality and competitive price,which leading our goods are popular in Europe,Southeast Asia,Middle-East and other countries abroad.Doorplus extensive range of Architectural Hardware products offers a well-priced package of functionality and style.

ABOUT
FINISH

Color power is introduced in design, a day is enlightened through this colorful combination which reflects passion for life.

Each piece is a re-creation of art, leading the same kind of brand with innovative design. The best combination of form and meaning, the creation superposition of use function and aesthetic appeal.

Classic works of art touch the soul. Luxuriant and chic design and exquisite and excellent craft, people hearten, will give full play to the aesthetic feeling, can yet be regarded as a perfect combination of creativity and technology.

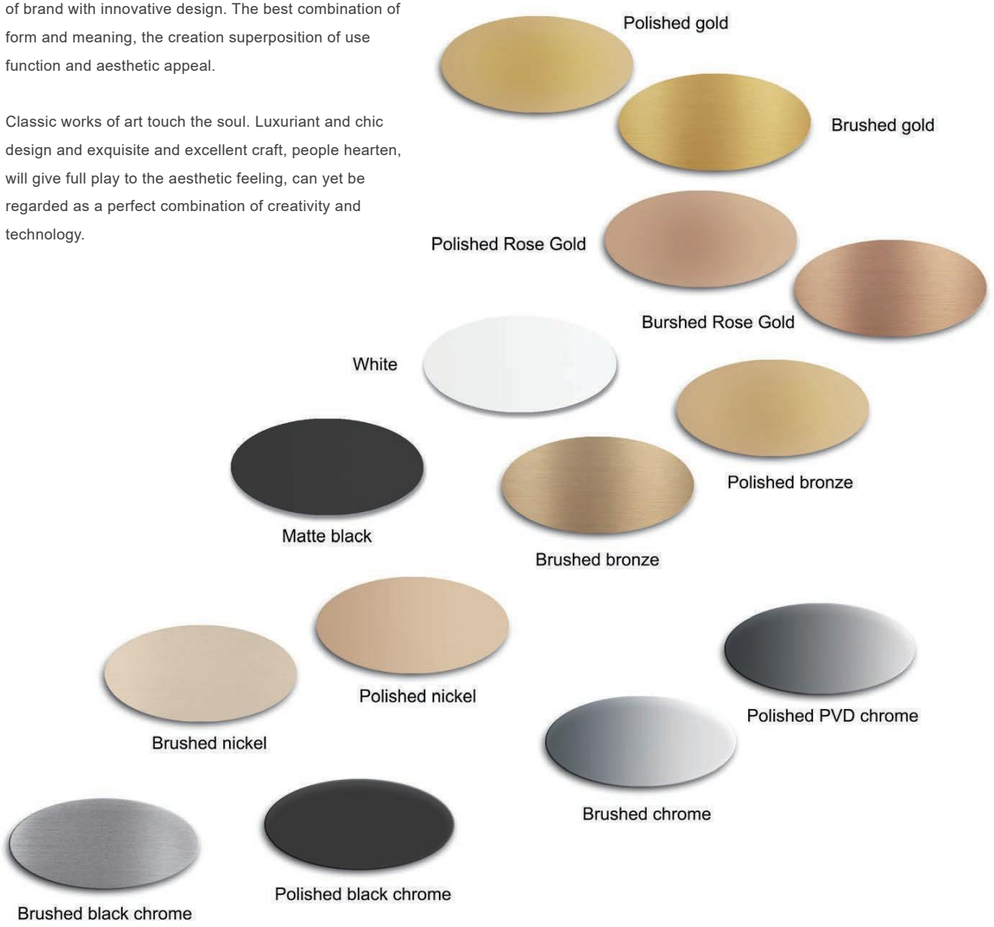

CERTIFICATE



Lever Handle



Door Cylinder



Door Hinge



Lever Handle



Fire-Exit Hardware



Panic Hardware



Door closer



Door closer



Door closer

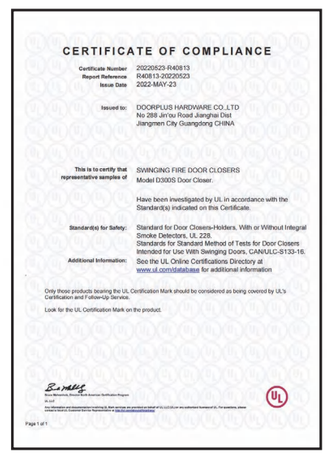

Door closer



Door closer



Door closer

DOOR ACCESSORIES



TECHNICAL INFORMATION

MATERIAL
Stainless steel 304/316

70001

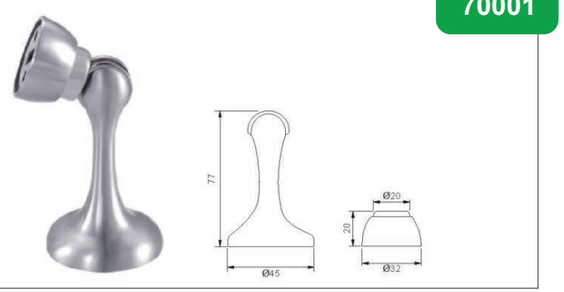

TECHNICAL INFORMATION

MATERIAL
Stainless steel 304/316

70002

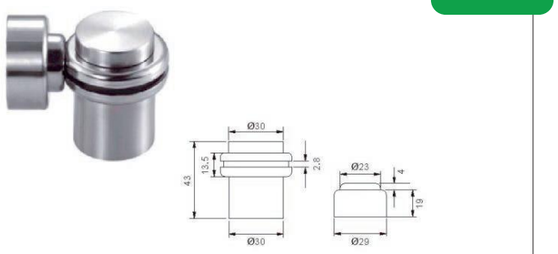

TECHNICAL INFORMATION

MATERIAL
Stainless steel 304/316

70003

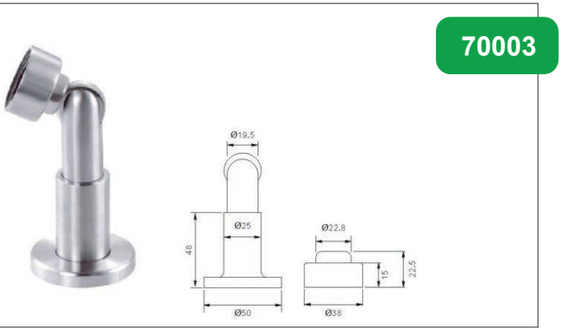

TECHNICAL INFORMATION

MATERIAL
Stainless steel 304/316

70004

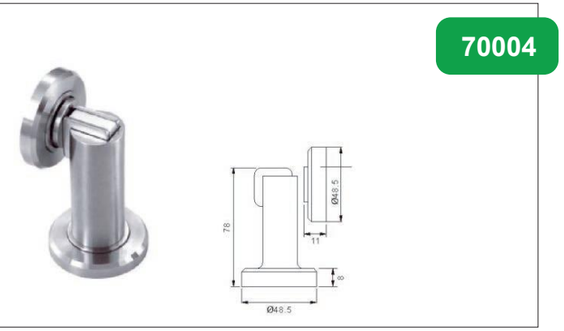

COLOUR CODING

Satin Stainless steel	SSS
Polished Stainless steel	PSS
Matt black	MB

TECHNICAL INFORMATION

MATERIAL
Stainless steel 304/316

70005



TECHNICAL INFORMATION

MATERIAL
Stainless steel 304/316

70006

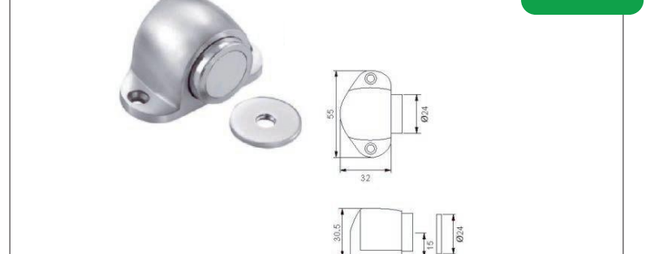

TECHNICAL INFORMATION

MATERIAL
Stainless steel 304/316

70007

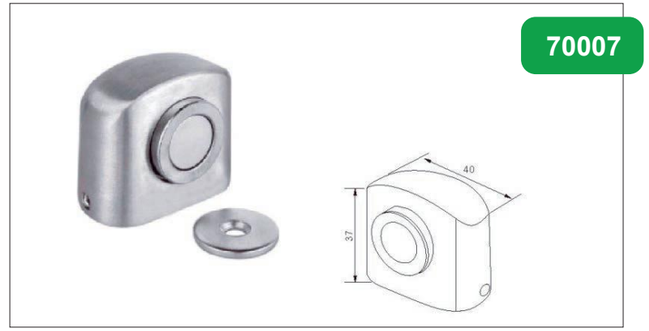

TECHNICAL INFORMATION

MATERIAL
Stainless steel 304/316

70008

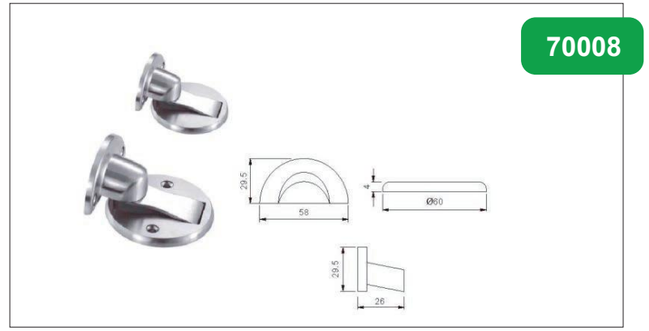

COLOUR CODING

Satin Stainless steel	SSS
Polished Stainless steel	PSS
Matt black	MB

TECHNICAL INFORMATION

MATERIAL
Stainless steel 304/316

70009

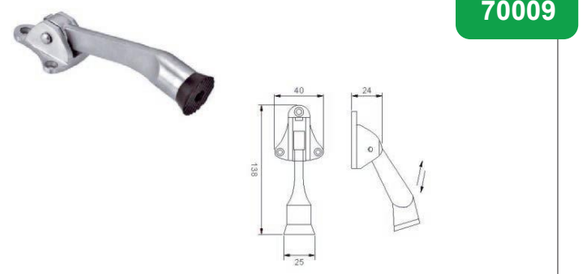

TECHNICAL INFORMATION

MATERIAL
Stainless steel 304/316

70010

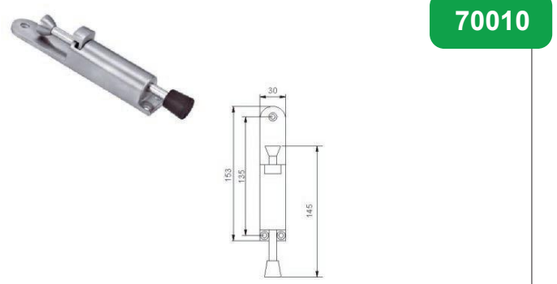

TECHNICAL INFORMATION

MATERIAL
Stainless steel 304/316

70011

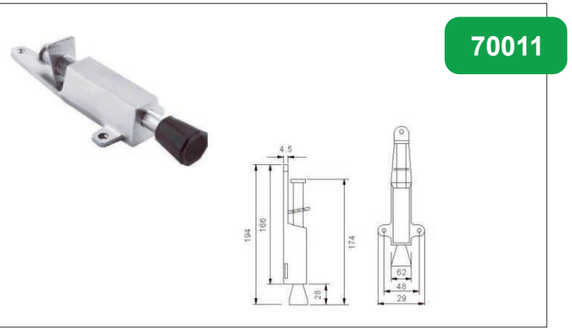

TECHNICAL INFORMATION

MATERIAL
Stainless steel 304/316

70012

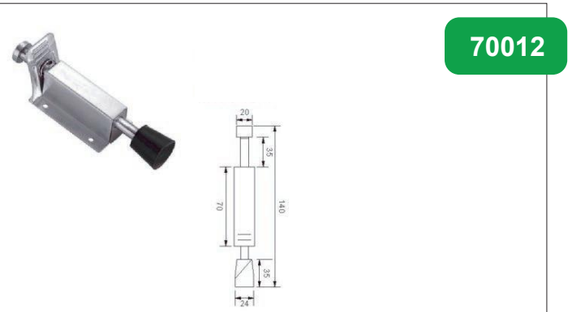

COLOUR CODING

Satin Stainless steel	SSS
Polished Stainless steel	PSS
Matt black	MB

TECHNICAL INFORMATION

MATERIAL
Stainless steel 304/316

70013

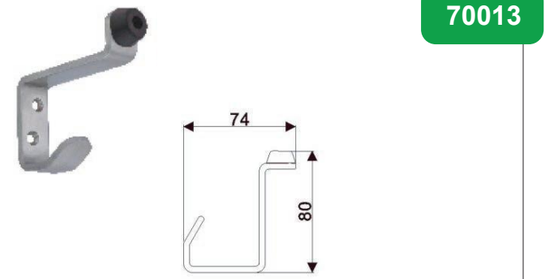

TECHNICAL INFORMATION

MATERIAL
Stainless steel 304/316

70014

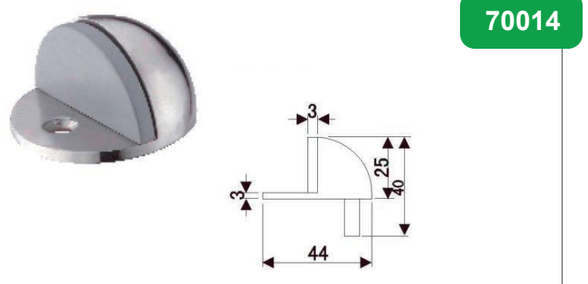

TECHNICAL INFORMATION

MATERIAL
Stainless steel 304/316

70015

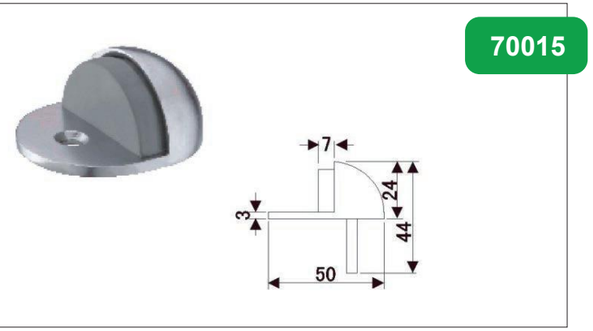

TECHNICAL INFORMATION

MATERIAL
Stainless steel 304/316

70016

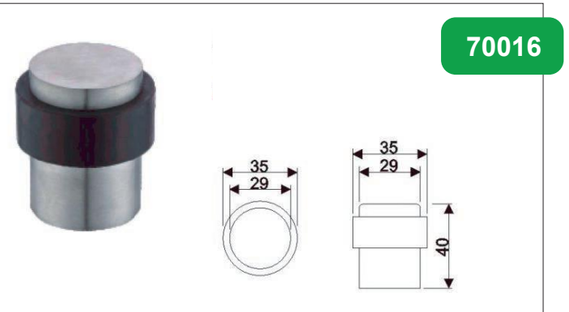

COLOUR CODING

Satin Stainless steel	SSS
Polished Stainless steel	PSS
Matt black	MB

70017

TECHNICAL INFORMATION

MATERIAL
Stainless steel 304/316

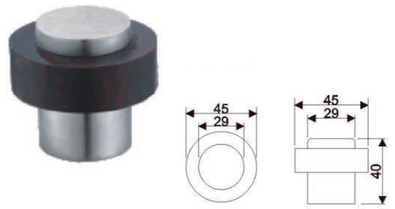

70018

TECHNICAL INFORMATION

MATERIAL
Stainless steel 304/316

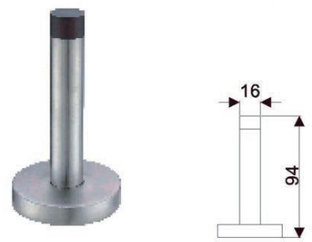

70019

TECHNICAL INFORMATION

MATERIAL
Stainless steel 304/316



70020

TECHNICAL INFORMATION

MATERIAL
Stainless steel 304/316

COLOUR CODING

Satin Stainless steel	SSS
Polished Stainless steel	PSS
Matt black	MB

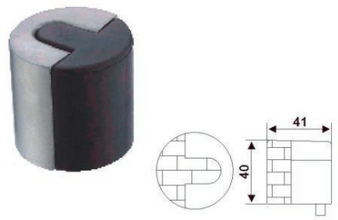

70021

TECHNICAL INFORMATION

MATERIAL
Stainless steel 304/316



70022

TECHNICAL INFORMATION

MATERIAL
Stainless steel 304/316



70023

TECHNICAL INFORMATION

MATERIAL
Stainless steel 304/316

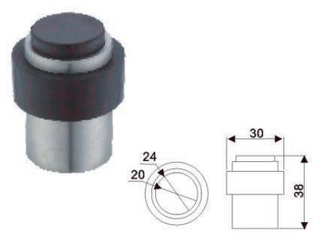

70024

TECHNICAL INFORMATION

MATERIAL
Stainless steel 304/316

COLOUR CODING

Satin Stainless steel	SSS
Polished Stainless steel	PSS
Matt black	MB

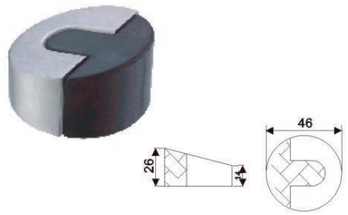

TECHNICAL INFORMATION

MATERIAL
Stainless steel 304/316

70025



TECHNICAL INFORMATION

MATERIAL
Stainless steel 304/316

70026



TECHNICAL INFORMATION

MATERIAL
Stainless steel 304/316

70027



TECHNICAL INFORMATION

MATERIAL
Stainless steel 304/316

70028



COLOUR CODING

Satin Stainless steel	SSS
Polished Stainless steel	PSS
Matt black	MB

TECHNICAL INFORMATION

MATERIAL
Stainless steel 304/316

70029



TECHNICAL INFORMATION

MATERIAL
Stainless steel 304/316

70030



TECHNICAL INFORMATION

MATERIAL
Stainless steel 304/316

70031



TECHNICAL INFORMATION

MATERIAL
Stainless steel 304/316

70032



COLOUR CODING

Satin Stainless steel	SSS
Polished Stainless steel	PSS
Matt black	MB

TECHNICAL INFORMATION

MATERIAL
Stainless steel 304/316

70033



TECHNICAL INFORMATION

MATERIAL
Stainless steel 304/316

70034



TECHNICAL INFORMATION

MATERIAL
Stainless steel 304/316

70035



TECHNICAL INFORMATION

MATERIAL
Stainless steel 304/316

70036



COLOUR CODING

Satin Stainless steel	SSS
Polished Stainless steel	PSS
Matt black	MB

TECHNICAL INFORMATION

MATERIAL
Stainless steel 304/316

70037



TECHNICAL INFORMATION

MATERIAL
Stainless steel 304/316

70038

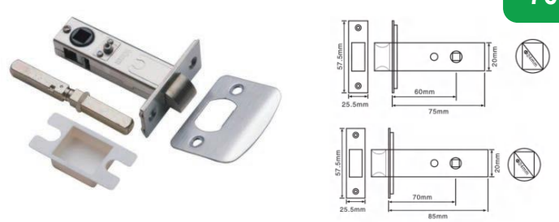

TECHNICAL INFORMATION

MATERIAL
Stainless steel 304/316

70047



TECHNICAL INFORMATION

MATERIAL
Stainless steel 304/316

70048



COLOUR CODING

Satin Stainless steel	SSS
Polished Stainless steel	PSS
Matt black	MB

TECHNICAL INFORMATION

MATERIAL
Stainless steel 304/316

70049



TECHNICAL INFORMATION

MATERIAL
Stainless steel 304/316

70050

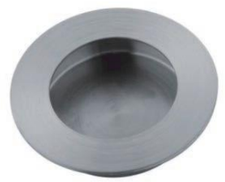

TECHNICAL INFORMATION

MATERIAL
Stainless steel 304/316

70051



TECHNICAL INFORMATION

MATERIAL
Stainless steel 304/316

70052



COLOUR CODING

Satin Stainless steel	SSS
Polished Stainless steel	PSS
Matt black	MB

TECHNICAL INFORMATION

MATERIAL
Stainless steel 304/316

70053



TECHNICAL INFORMATION

MATERIAL
Stainless steel 304/316

70054



TECHNICAL INFORMATION

MATERIAL
Stainless steel 304/316

70055



TECHNICAL INFORMATION

MATERIAL
Stainless steel 304/316

70056



COLOUR CODING

Satin Stainless steel	SSS
Polished Stainless steel	PSS
Matt black	MB

TECHNICAL INFORMATION

MATERIAL
Stainless steel 304/316

70057



TECHNICAL INFORMATION

MATERIAL
Stainless steel 304/316

70058



TECHNICAL INFORMATION

MATERIAL
Stainless steel 304/316

70059



TECHNICAL INFORMATION

MATERIAL
Stainless steel 304/316

70060



COLOUR CODING

Satin Stainless steel	SSS
Polished Stainless steel	PSS
Matt black	MB

TECHNICAL INFORMATION

MATERIAL
Stainless steel 304/316

70061



TECHNICAL INFORMATION

MATERIAL
Stainless steel 304/316

70062

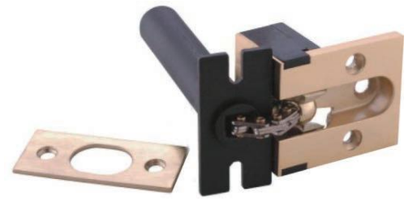

TECHNICAL INFORMATION

MATERIAL
Stainless steel 304/316

70063



TECHNICAL INFORMATION

MATERIAL
Stainless steel 304/316

70064



COLOUR CODING

Satin Stainless steel	SSS
Polished Stainless steel	PSS
Matt black	MB

TECHNICAL INFORMATION

MATERIAL
Stainless steel 304/316

70065



TECHNICAL INFORMATION

MATERIAL
Stainless steel 304/316

70066



TECHNICAL INFORMATION

MATERIAL
Stainless steel 304/316

70067



TECHNICAL INFORMATION

MATERIAL
Stainless steel 304/316

COLOUR CODING

Satin Stainless steel	SSS
Polished Stainless steel	PSS
Matt black	MB

70068



DOORPLUS HARDWARE CO.,LTD
www.doorplus.cc

SUS 201 SUS 304 SUS 316 ZNIC

DOOR Accessories

TECHNICAL INFORMATION

MATERIAL
Stainless steel 304/316

70069



TECHNICAL INFORMATION

MATERIAL
Stainless steel 304/316

70070



TECHNICAL INFORMATION

MATERIAL
Stainless steel 304/316

70071



TECHNICAL INFORMATION

MATERIAL
Stainless steel 304/316

COLOUR CODING

Satin Stainless steel	SSS
Polished Stainless steel	PSS
Matt black	MB

70072



TECHNICAL INFORMATION

MATERIAL
Stainless steel 304/316

70073



TECHNICAL INFORMATION

MATERIAL
Stainless steel 304/316

70074



TECHNICAL INFORMATION

MATERIAL
Stainless steel 304/316

70075



TECHNICAL INFORMATION

MATERIAL
Stainless steel 304/316

70076



COLOUR CODING

Satin Stainless steel	SSS
Polished Stainless steel	PSS
Matt black	MB

DOORPLUS HARDWARE CO.,LTD
www.doorplus.cc

SUS 201 SUS 304 SUS 316 ZNIC

DOOR Accessories

TECHNICAL INFORMATION

MATERIAL
Stainless steel 304/316

70077



TECHNICAL INFORMATION

MATERIAL
Stainless steel 304/316

70078



TECHNICAL INFORMATION

MATERIAL
Stainless steel 304/316

70079



TECHNICAL INFORMATION

MATERIAL
Stainless steel 304/316

70080



COLOUR CODING

Satin Stainless steel	SSS
Polished Stainless steel	PSS
Matt black	MB

TECHNICAL INFORMATION

MATERIAL
Stainless steel 304/316

70081



TECHNICAL INFORMATION

MATERIAL
Stainless steel 304/316

70082



TECHNICAL INFORMATION

MATERIAL
Stainless steel 304/316

70083

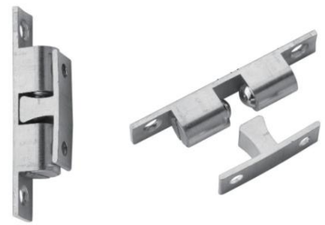

TECHNICAL INFORMATION

MATERIAL
Stainless steel 304/316

70084



COLOUR CODING

Satin Stainless steel	SSS
Polished Stainless steel	PSS
Matt black	MB

TECHNICAL INFORMATION

MATERIAL
Stainless steel 304/316

70085



TECHNICAL INFORMATION

MATERIAL
Stainless steel 304/316

70086



TECHNICAL INFORMATION

MATERIAL
Stainless steel 304/316

70087



TECHNICAL INFORMATION

MATERIAL
Stainless steel 304/316

COLOUR CODING

Satin Stainless steel	SSS
Polished Stainless steel	PSS
Matt black	MB