T-TAPS，AWG 12-10#，PPY，Nylon-insulated，Blue

- **This electrical connectors allow for an easy tap off of a run conductor.**
- **This tap allows for a male quick disconnect to complete the tap connection.**
- **This is especially useful when multiple re-connections could be necessary.**
- **Allows user to tap into a wire in mid-span without cutting or stripping the wire.**
- **Connector then mates with a 0.250 inch male quick disconnect tab, making a reusable quick -connect wiring termination.**
- **"colour code" help choose the right connector.**



Product Classification

Model	PPY
Part Number	-
Detail Description	T-TAPS，AWG 12-10#，PPY，Nylon-insulated，Blue

General Specifications

Color Code	Blue

Dimensions

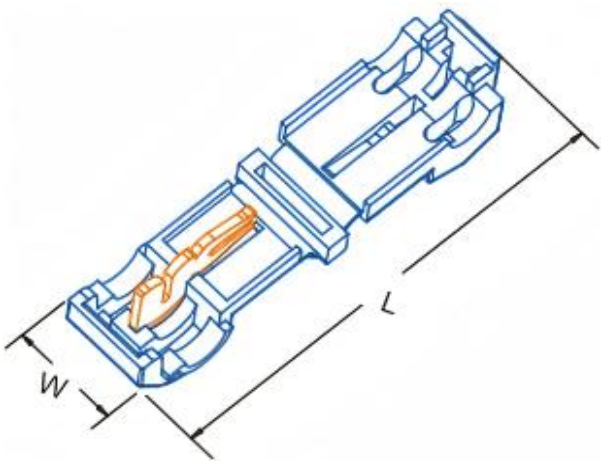

Tongue Width (W)	1.46 in | 37.0 mm
Overall length (L)	0.03 in | 0.8 mm
A.W.G	12-10 A.W.G

©ZLX TERMINALS Inc. All rights reserved.

The information contained herein is subject to change without notice. We reserve the right to make technical changes or modify the contents of this document without prior notice.
Revised: JAN 16, 2026
Public

Electrical Specifications	
Rating - Maximum Voltage	35KV
Environmental Specifications	
Operating Temperature	-40 °C to +105°C (-40 °F to +221 °F)
Storage Temperature	-40 °C to +80°C (-40 °F to +176 °F)
Packaging and Weights	
Included	Lug
Packaging Quantity and UOM	1 pcs
Piece Weight	- lb | - kg
Certifications and Compliance	
ISO 9001:2015	Designed, manufactured and/or distributed under this quality management system
RoHS	Compliant

©ZLX TERMINALS Inc. All rights reserved.

The information contained herein is subject to change without notice. We reserve the right to make technical changes or modify the contents of this document without prior notice.