SPLICE CONNECTORS，AWG 22-16#，3MR，Red

- **3M connectors are quick and convenient. Makes quick splices with no stripping, twisting, soldering, or special tooling.**

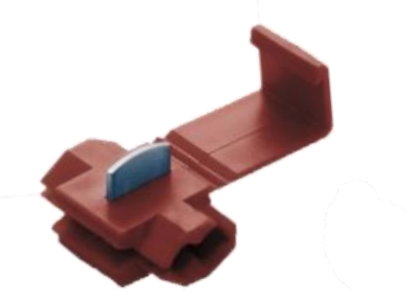

- **Easy to use.**
- **Saves time.**
- **No special tooling required, just squeeze to install.**
- **Dependable connection.**
- **"colour code" help choose the right connector.**

Product Classification

Model	3MR
Part Number	-
Detail Description	SPLICE CONNECTORS，AWG 22-16#，3MR，Red

General Specifications

Color Code	Red

Dimensions

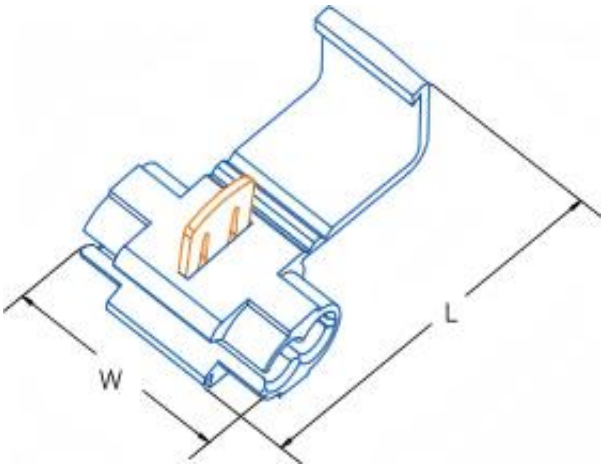

Tongue Width (W)	0.78 in | 19.7 mm
Overall length (L)	1.24 in | 31.5 mm
A.W.G	22-16 A.W.G

©ZLX TERMINALS Inc. All rights reserved.

The information contained herein is subject to change without notice. We reserve the right to make technical changes or modify the contents of this document without prior notice.
Revised: JAN 16, 2026
Public

Electrical Specifications	
Rating - Maximum Voltage	35KV

Environmental Specifications	
Operating Temperature	-40 °C to +105°C (-40 °F to +221 °F)
Storage Temperature	-40 °C to +80°C (-40 °F to +176 °F)

Packaging and Weights	
Included	Lug
Packaging Quantity and UOM	1 pcs
Piece Weight	- lb | - kg

Certifications and Compliance	
ISO 9001:2015	Designed, manufactured and/or distributed under this quality management system
RoHS	Compliant

©ZLX TERMINALS Inc. All rights reserved.

The information contained herein is subject to change without notice. We reserve the right to make technical changes or modify the contents of this document without prior notice.