Instruction Manual

Low Profile Lift Table



X-25C , X-50C， X-100C

Note: Owner/Operator must read and understand this instruction Manual before using the low profile lift table

Thank you very much for selecting our product. This instruction manual describes correct operating method to ensure prolonged service life. Please read and completely understand this manual before operating the low profile LIFT TABLE. Always keep this manual at an appropriate place. If the manual or warning decal is missing, please contact with dealer.

Note: This Manual has been prepared for skilled and competent personal. It provides instructions for using the product correctly and parts list. This Manual cannot replace the professional skills and expertise of the user.

1.



WARNING! *If operating the lift table improperly, a person may be seriously injured. Therefore, operate properly according to the following instruction*

◇ Read & thoroughly understand the Instruction Manual completely before using. Follow all safety instructions strictly.

◇ It is necessary to check all safety devices before operation.

◇ Make sure that there are no obstacles in the working area.

◇ Do not put foot or hand in scissors mechanism or through frame.

◇ Screw the lifting eyes on the base frame before working on the lift table.

◇ Do not overload the lift table. Load should be distributed on the table according to relevant load distribution chart.

◇ Use the lift table on flat and solid ground.

◇ While operation, it is forbidden to contact the moving parts of the lift table.

◇ While the lift table moving, it is forbidden to adjust or to move the load.

◇ It is forbidden to lift the load, which perhaps does harm to a person or other object.

◇ It is forbidden to operate the lift table while a person is under the table.

◇ Do not adjust the safety valve of hydraulic power pack.

◇ It is forbidden to operate the lift table even if there is small structure distortion.

◇ Do not use in an explosive or flammable place.

2. Note ! Maximum load refers to the load being uniformly distributed over the entire platform area.

In accordance with **EN1570,**Safety Requirements for Lifting Tables，the basic requirements are:

Ⅰ 100% of the rated load(maximum load) uniformly distributed over the entire platform area.

Ⅱ or 50% of the rated load(maximum load) uniformly distributed over half the length of the platform.

Ⅲ or 33% of the rated load(maximum load) uniformly distributed over half the width of the platform.

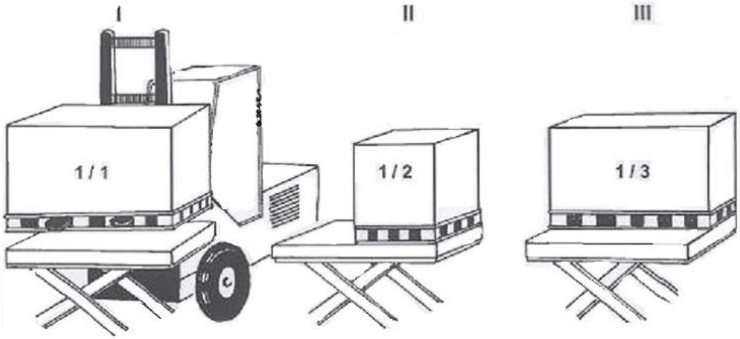

3.



CAUTION! *If operating the lift table improperly, a person may be injured. Therefore, operate properly according to the following instruction.*

◇ Do not allow a person to operate the lift table, who does not understand its operation.

◇ It is forbidden to change the lift table without manufacturer's written admission.

◇ It is necessary to use the spare parts designated by manufacturer.

◇ Make sure to keep a distance between the table and ambient objects enough to operate the lift table safely.

◇ Keep the hydraulic system under clean and safe condition.

◇ Always do maintenance and routine check while the lift table is unloaded.

◇ The lift table is not waterproof and should be used in a dry environment.

4. DAILY INSPECTION

Daily inspection is effective to find the malfunction or fault on the lift table. Before operation, check the lift table according to the following points.



CAUTION! *Do not use the lift table if any malfunction or fault is found.*

◇ Check all the terms of WARNING and CAUTION.

◇ Check scratches, bending or crack on the lift table.

◇ Check smooth movement of the table.

◇ Check if there is any hydraulic oil leakage.

◇ Check the vertical creep of the table.

◇ Check if all the bolts and nuts are firmly tightened.

5. HYDRAULIC CIRCUIT

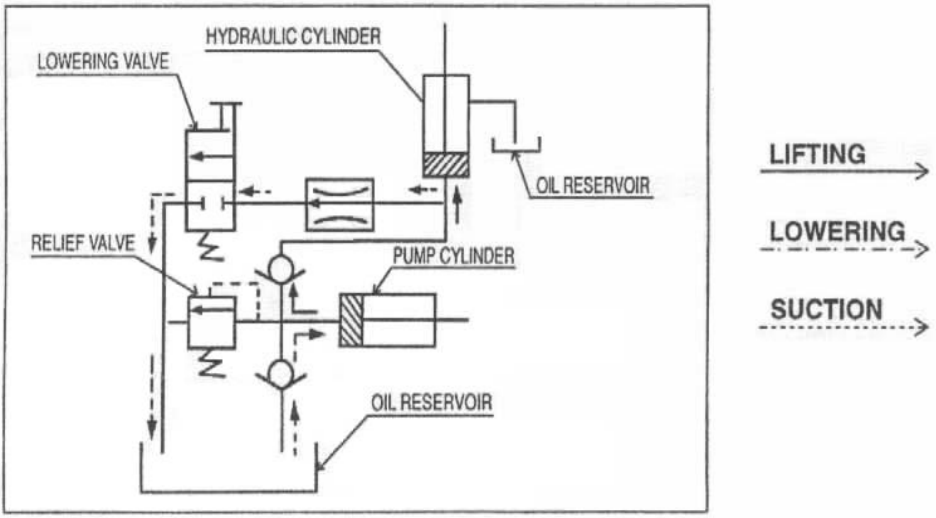

6. Specifications

Model	Capacity (kg)	Table (mm)	Table Height(mm)	Stroke	Pedal to top. (approx.times)	Weight (kg)
X-25C	250	830x500	152-715	563	30/35	73
X-50C	500	1010x520	152-800	648	58/62	115
X-100C	1000	1010x520	160-800	640	80/85	122

DIMENSIONS

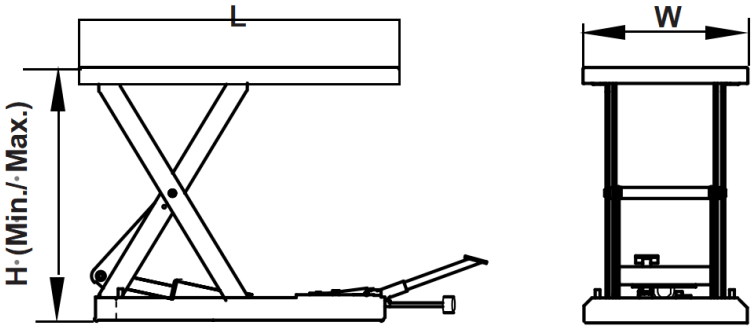

7.OPERATION INSTRUCTION

■ TO RAISE SCISSOR LIFT TABLE

■ 1. MAKE SURE TO CENTER THE LOAD IN THE MIDDLE OF THE PLATFORM.

■ 2. STEP ON THE FOOT PEDAL TO LIFT THE PLATFORM.(FIG 1)



Fig 1

■ TO LOWER SCISSOR LIFT TABLE

■ PULL OUT THE RELIEF LEVER AND ATTACH TO TUBE A(FIG.2)

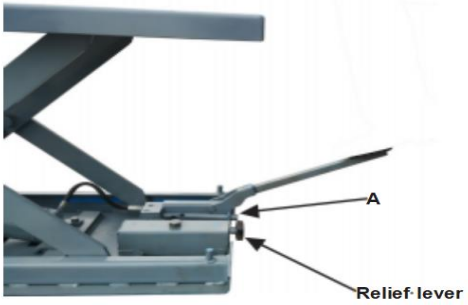

Fig 2

8. MANTENANCE

HYDRAULIC OIL

HYDRAULIC OIL SHOULD BE CHANGED AT LEAST ONCE A YEAR, OR SOONER IF THE OIL DARKENS OR BECOMES GRITTY. FLUSH THE RESERVOIR BEFORE REFILLING. PRESENCE OF WATER IS INDICATED IF THE OIL TURNS MILKY. RECOMMENDED OIL IS ISO HL32(SUCH AS RANDO OIL R＆O32、D.T.E.OIL LIGHT、TURBO32)

NOTE: IF THE HYDRAULIC OIL IS MILKY WHITE IN COLOR, WATER IS IN THE HYDRAULIC SYSTEM AND THE HYDRAULIC OIL SHOULD BE CHANGED IMMEDIATELY.

NOTE: WASTE OIL MUST BE DISPOSED OF IN AN ENVIRONMENTALLY-FRIENDLY WAY AND IN ACCORDANCE WITH REGULATORY AUTHORITIES.

9. HOW TO FILL OIL

1. REMOVE THE AIR VENT SCREW (#20)
2. USE HAND OIL FILLER TO MAKE SURE THE OIL OUTLET IS INSERTED.
3. REINSTALL THE AIR VENT SCREW.

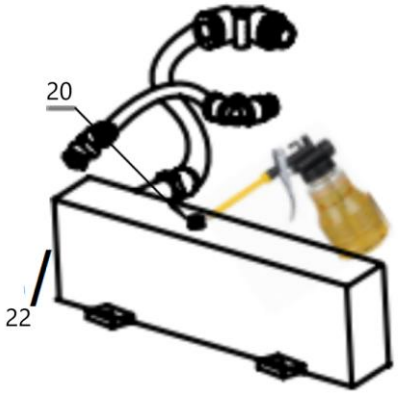

10.AIR BLEED PROCEDURE

IF AIR IS IN THE HYDRAULIC SYSTEM, USE ONE OF THE FOLLOWING TWO METHODS TO REMOVE AIR.

METHOD 1: WITHOUT LOAD

A. PRESS DOWN THE RELEASE FOOT LEVER AND HOLD.

B. OPERATE FOOT PEDAL FOR TEN CYCLES OR MORE UNTIL AIR IS BLED FROM THE HYDRAULIC SYSTEM.

METHOD 2: WITH LOAD (≥100KG)

A. OPERATE FOOT PEDAL FOR TEN CYCLES TO RAISE THE LOAD.

B. PRESS DOWN THE RELEASE FOOT LEVER TO LOWER THE LOAD.

C. REPEAT UNTIL AIR IS BLED FROM THE HYDRAULIC SYSTEM.

11.X-25C EXPLODED FIGURE / PARTS LIST

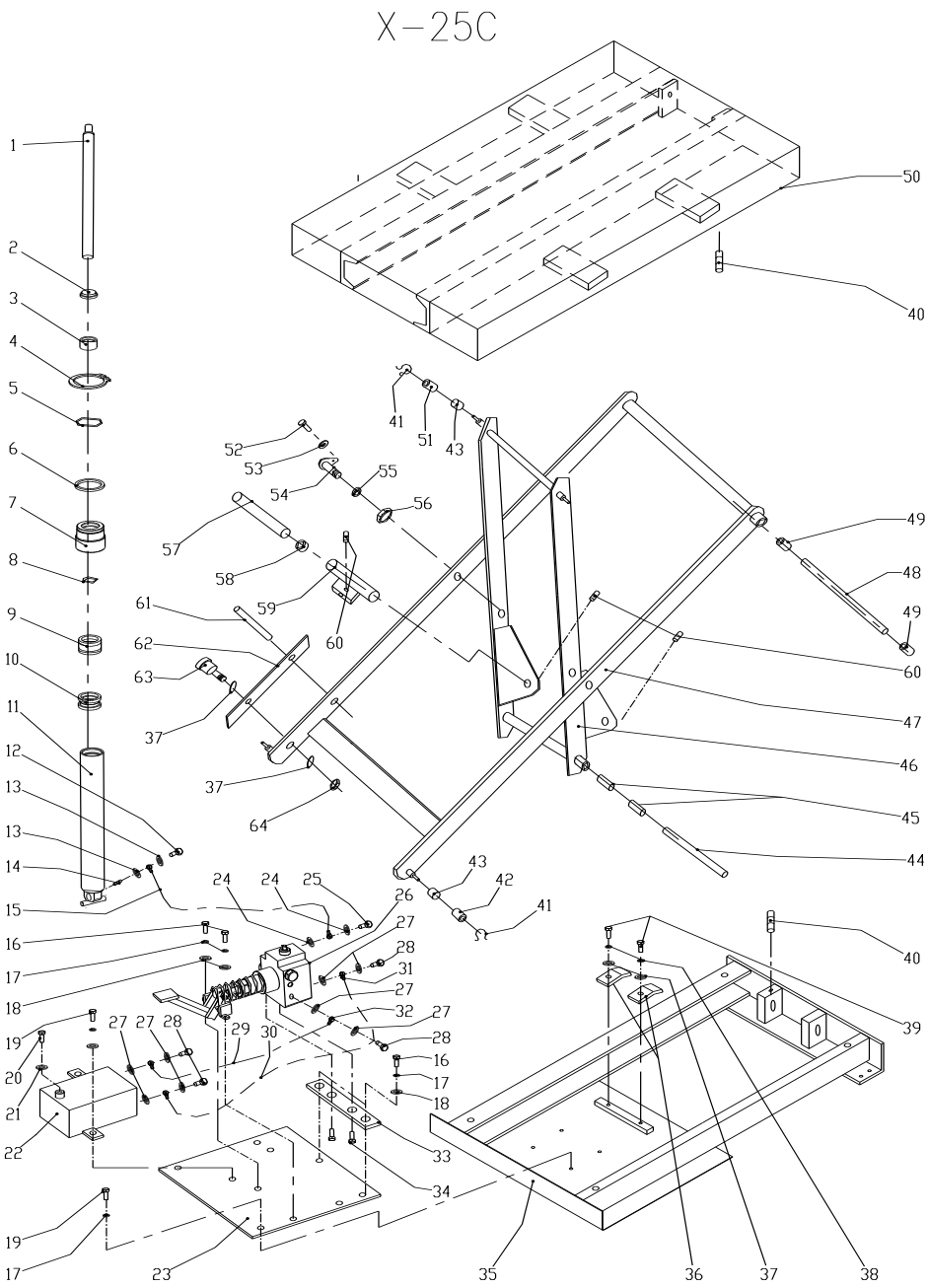

X-25C PARTS LIST

NO.	DESCRIPTION	QTY	NO.	DESCRIPTION	QTY
1.	Piston rod	1	33.	Plate 1	1
2.	Dust Seal d30xd60x18.4	1	34.	Bolt M6x12	2
3.	Guide ring	1	35.	Chassis	1
4.	Retaining ring 55	1	36.	Cylinder plate	2
5.	Retaining ring 60	1	37.	Washer 10	6
6.	O-ring 55x2.65	1	38.	Spring washer 10	2
7.	Cylinder head	1	39.	Bolt M10x25	2
8.	Retaining ring 30	1	40.	Bolt M6x8	2
9.	sealing ring d44xd60x18.4	1	41.	Retaining ring 16	4
10.	Piston	1	42.	Chassis roller	2
11.	Cylinder	1	43.	Roller bushing	4
12.	Joint 1	1	44.	Internal shear pin	1
13.	Sealing ring d16.7xd24x1.5	2	45.	Bearing d16xd18x17	2
14.	Valve	1	46.	Internal cutting	1
15.	Hose	1	47.	External shear	1
16.	Screw M6x12	4	48.	External shear pin	1
17.	Spring washer 6	10	49.	Bushing 2	4
18.	Washer 6	6	50.	Table	1
19.	Bolt M6x10	6	51.	Table roller	2
20.	Oil filler screw	1	52.	Bolt M8x16	2
21.	Washer 18	1	53.	Spring washer 8	2
22.	Oil tank	1	54.	Axis	2
23.	Plate	1	55.	Washer 14	2
24.	Seal ring14	2	56.	Locking Nut M14x1.5	2
25.	Joint 2	1	57.	Install axis	1
26.	Valve body	1	58.	Set	1
27.	USS washer 10	8	59.	Cylinder top block	1
28.	Hinged joint	4	60.	Bolt M6x12	3
29.	Oil pipe 1	1	61.	Pin 8x30	2
30.	Oil pipe 2	1	62.	Rod	2
31.	Oil suction joint	2	63.	Bolt M10x35	2
32.	Right-angle joint	2	64.	Bolt M10	2

X-25C Part 26 Valve body exploded figure

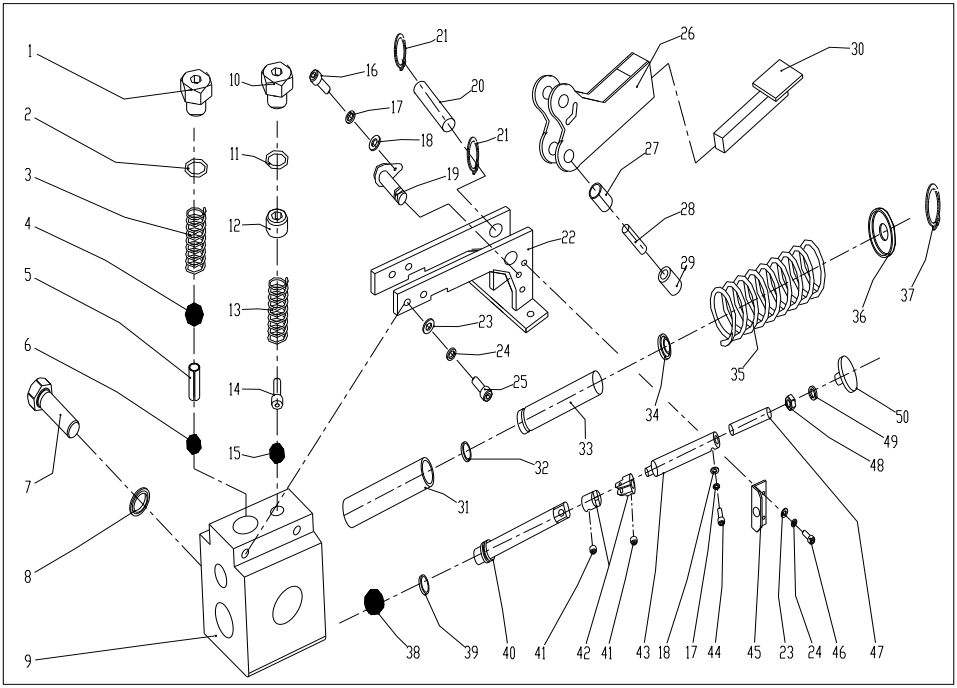

X-25C Part 26 Valve body list

NO.	DESCRIPTION	QTY	NO.	DESCRIPTION	QTY
1.	Screw G1/4	1	26.	Arm	1
2.	Combination washer 14	1	27.	Bushing	1
3.	Oil Spring	1	28.	Roller pin	1
4.	Steel ball D10	1	29.	Roller	1
5.	Pin 5x10	1	30.	Foot rod	1
6.	Steel ball D6	1	31.	Cylinder body	1
7.	Screw	1	32.	UHS ring d14xd22x5	1
8.	USS washer d10.37xd15.88x2.03	1	33.	Rod	1
9.	valve body	1	34.	DH ring d22xd30x4.5/6	1
10.	Oil screw	1	35.	Rod spring	1
11.	O-ring	1	36.	Spring seat 1	1
12.	Bolt M10x1x6	1	37.	Retaining ring 20	1
13.	Pressure spring	1	38.	Steel ball D8	1
14.	Spring seat	1	39.	O-ring d6.9x1.8	1
15.	Steel ball D5	1	40.	Oil rod	1
16.	Bolt M4x10	1	41.	Bolt M5x5	2
17.	Spring washer 4	1	42.	U-joint 10x20x45	1
18.	Washer 4	1	43.	Rod 1	1
19.	Pin	1	44.	Bolt M4X20	1
20.	Arm pin	1	45.	Support	1
21.	Ring 12	2	46.	Bolt M6x10	2
22.	Arm bracket	1	47.	Rod 2	1
23.	Washer4	6	48.	Nut M12	1
24.	Spring washer4	6	49.	Spring washer 12	1
25.	Bolt M6x12	4	50.	Control stick	1

X-50C EXPLODED FIGURE / PARTS LIST

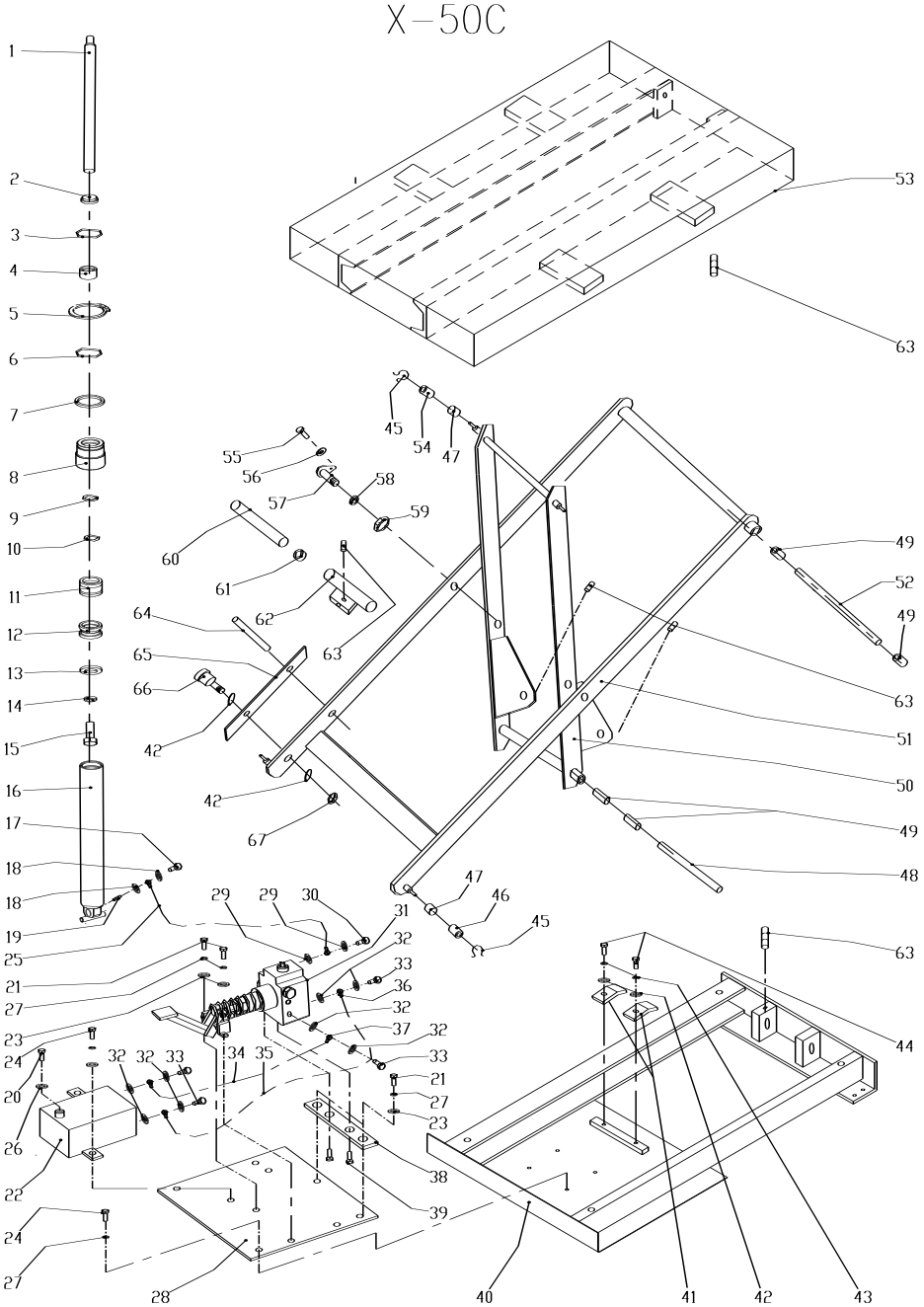

X-50C PARTS LIST

NO.	DESCRIPTION	QTY	NO.	DESCRIPTION	QTY
1.	Piston rod	1	35.	Oil pipe 2	2
2.	Oil seal d58xd50x6.5	1	36.	Oil suction joint	2
3.	Y-ring 50x60x6	1	37.	Right-angle joint	2
4.	Guide ring	1	38.	Plate 1	1
5.	Retaining ring 75	1	39.	Bolt M6x12	2
6.	Retaining ring 80	1	40.	Chassis	1
7.	O-ring 75x2.65	1	41.	Cylinder plate	2
8.	Cylinder head	1	42.	Washer 10	6
9.	STU -ring 28.98x3	1	43.	Spring washer 10	2
10.	O-ring 28.17x3.53	1	44.	Bolt M10x25	2
11.	sealing ring d80xd60x22.6	1	45.	Retaining ring 20	4
12.	Piston	1	46.	Chassis roller	2
13.	Washer	1	47.	Roller bushing	4
14.	Spring washer 16	1	48.	Internal shear pin	1
15.	Bolt M16x30	1	49.	Bearing d28xd25x20	6
16.	Cylinder	1	50.	Internal cutting	1
17.	Joint 1	1	51.	External shear	1
18.	Sealing ring d16.7xd24x1.5	2	52.	External shear pin	1
19.	Valve	1	53.	Table	1
20.	Oil filler screw	1	54.	Table roller	2
21.	Screw M6x12	4	55.	Bolt M8x16	2
22.	Oil tank	1	56.	Spring washer 8	2
23.	Washer 6	6	57.	Axis	2
24.	Bolt M6x10	6	58.	Washer	2
25.	Hose	1	59.	Locking Nut M16x1.5	2
26.	Washer 18	1	60.	Install axis	1
27.	Spring washer 6	10	61.	Set	1
28.	Plate	1	62.	Cylinder top block	1
29.	Seal ring14	2	63.	Bolt M6x12	5
30.	Joint 2	1	64.	Pin 8x25	2
31.	Valve body	1	65.	Rod	2
32.	USS washer 10	8	66.	Bolt M10x40	2
33.	Hinged joint	4	67.	Bolt M10	2
34.	Oil pipe 1	2			

X-50C Part 31 Valve body exploded figure

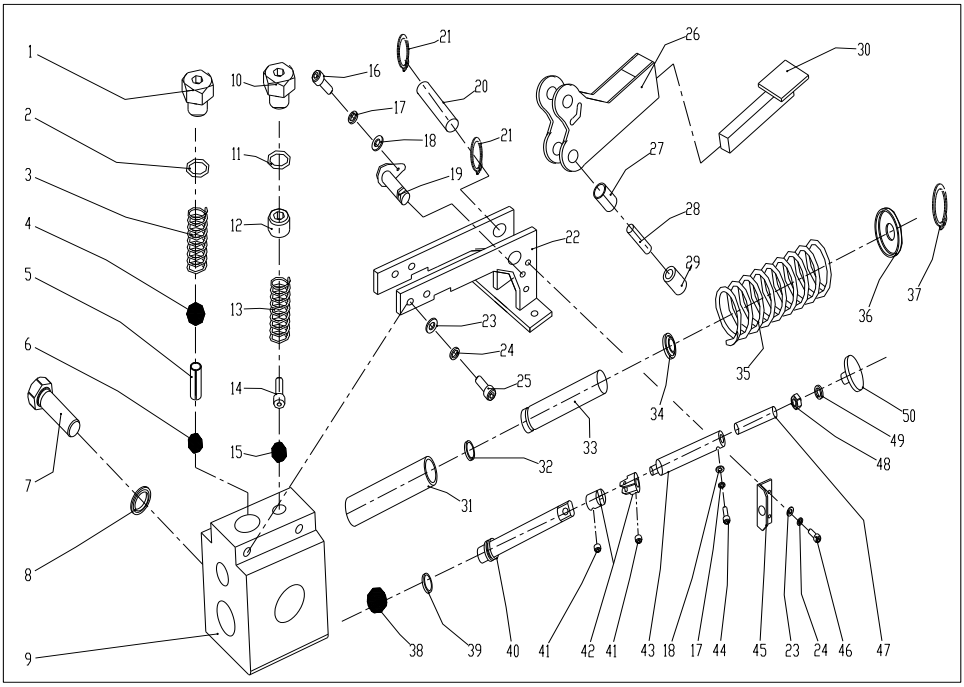

X-50C Part 31 Valve body list

NO.	DESCRIPTION	QTY	NO.	DESCRIPTION	QTY
1.	Screw G1/4	1	26.	Arm	1
2.	Combination washer 14	1	27.	Bushing	1
3.	Oil Spring	1	28.	Roller pin	1
4.	Steel ball D10	1	29.	Roller	1
5.	Pin 5x10	1	30.	Foot rod	1
6.	Steel ball D6	1	31.	Cylinder body	1
7.	Screw	1	32.	UHS ring d14xd22x5	1
8.	USS washer d10.37xd15.88x2.03	1	33.	Rod	1
9.	valve body	1	34.	DH ring d22xd30x4.5/6	1
10.	Oil screw	1	35.	Rod spring	1
11.	O-ring	1	36.	Spring seat 1	1
12.	Bolt M10x1x6	1	37.	Retaining ring 20	1
13.	Pressure spring	1	38.	Steel ball D8	1
14.	Spring seat	1	39.	O-ring d6.9x1.8	1
15.	Steel ball D5	1	40.	Oil rod	1
16.	Bolt M4x10	1	41.	Bolt M5x5	2
17.	Spring washer 4	1	42.	U-joint 10x20x45	1
18.	Washer 4	1	43.	Rod 1	1
19.	Pin	1	44.	Bolt M4X20	1
20.	Arm pin	1	45.	Support	1
21.	Ring 12	2	46.	Bolt M6x10	2
22.	Arm bracket	1	47.	Rod 2	1
23.	Washer4	6	48.	Nut M12	1
24.	Spring washer4	6	49.	Spring washer 12	1
25.	Bolt M6x12	4	50.	Control stick	1

X-100C EXPLODED FIGURE / PARTS LIST

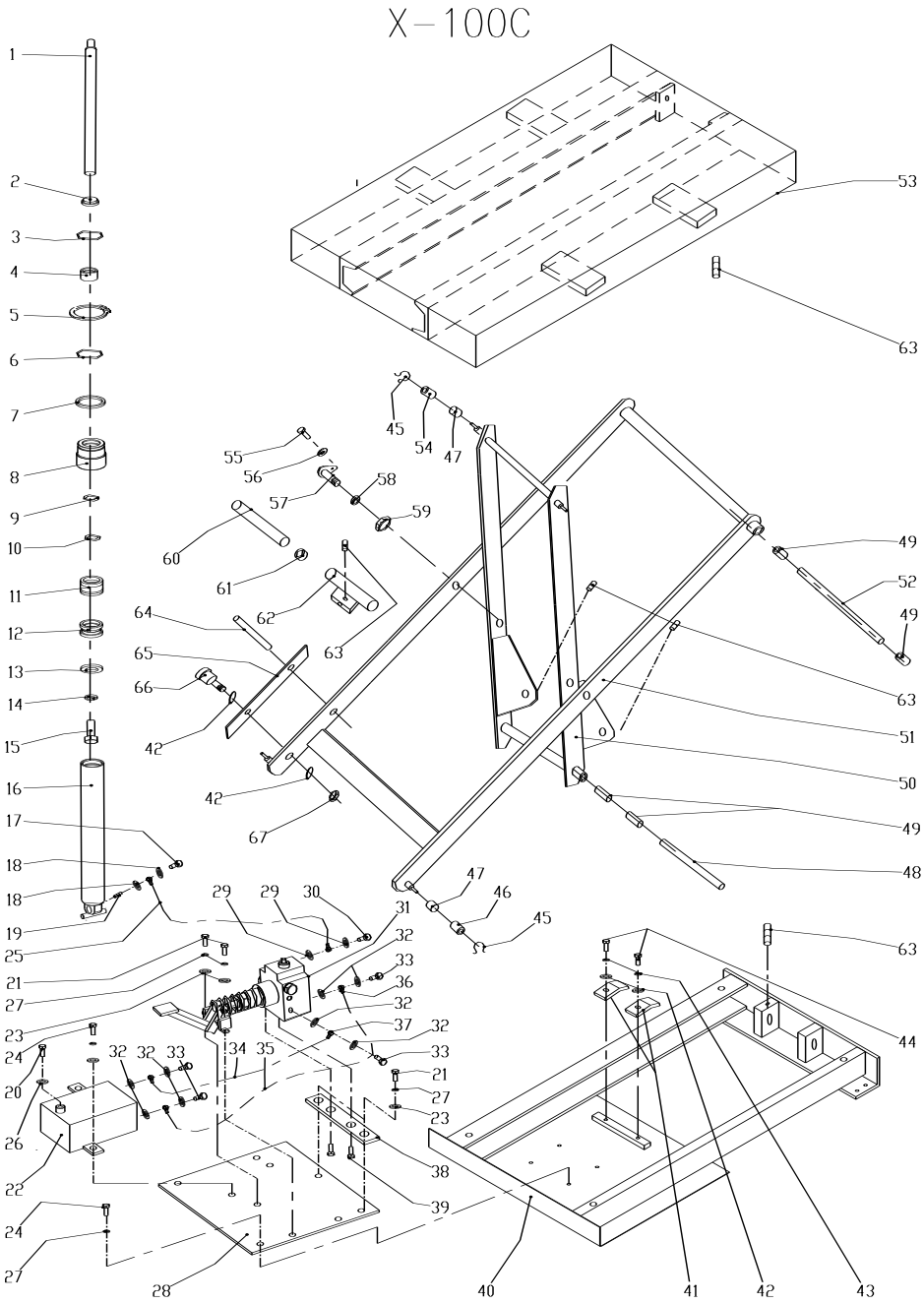

X-100C PARTS LIST

NO.	DESCRIPTION	QTY	NO.	DESCRIPTION	QTY
1.	Piston rod	1	35.	Oil pipe 2	1
2.	Oil seal d58xd50x6.5	1	36.	Oil suction joint	2
3.	Y-ring 50x60x6	1	37.	Right-angle joint	2
4.	Guide ring	1	38.	Plate 1	1
5.	Retaining ring 95	1	39.	Bolt M6x12	2
6.	Retaining ring 100	1	40.	Chassis	1
7.	O-ring 95x2.65	1	41.	Cylinder plate	2
8.	Cylinder head	1	42.	Washer 10	6
9.	STU -ring	1	43.	Spring washer 10	2
10.	O-ring 28.17x3.53	1	44.	Bolt M10x25	2
11.	sealing ring	1	45.	Retaining ring 20	4
12.	Piston	1	46.	Chassis roller	2
13.	Washer	1	47.	Roller bushing	4
14.	Spring washer 16	1	48.	Internal shear pin	1
15.	Bolt M16x30	1	49.	Bearing d28xd25x20	6
16.	Cylinder	1	50.	Internal cutting	1
17.	Joint 1	1	51.	External shear	1
18.	Sealing ring d16.7xd24x1.5	2	52.	External shear pin	1
19.	Valve	1	53.	Table	1
20.	Oil filler screw	1	54.	Table roller	2
21.	Screw M6x12	4	55.	Bolt M8x16	2
22.	Oil tank	1	56.	Spring washer 8	2
23.	Washer 6	6	57.	Axis	2
24.	Bolt M6x10	6	58.	Washer	2
25.	Hose	1	59.	Locking Nut M16x1.5	2
26.	Washer 18	1	60.	Install axis	1
27.	Spring washer 6	10	61.	Set	1
28.	Plate	1	62.	Cylinder top block	1
29.	Seal ring14	2	63.	Bolt M6x12	5
30.	Joint 2	1	64.	Pin 8x25	2
31.	Valve body	1	65.	Rod	2
32.	USS washer 10	8	66.	Bolt M10x40	2
33.	Hinged joint	4	67.	Bolt M10	2
34.	Oil pipe 1	1			

X-100C Part 31 Valve body exploded figure

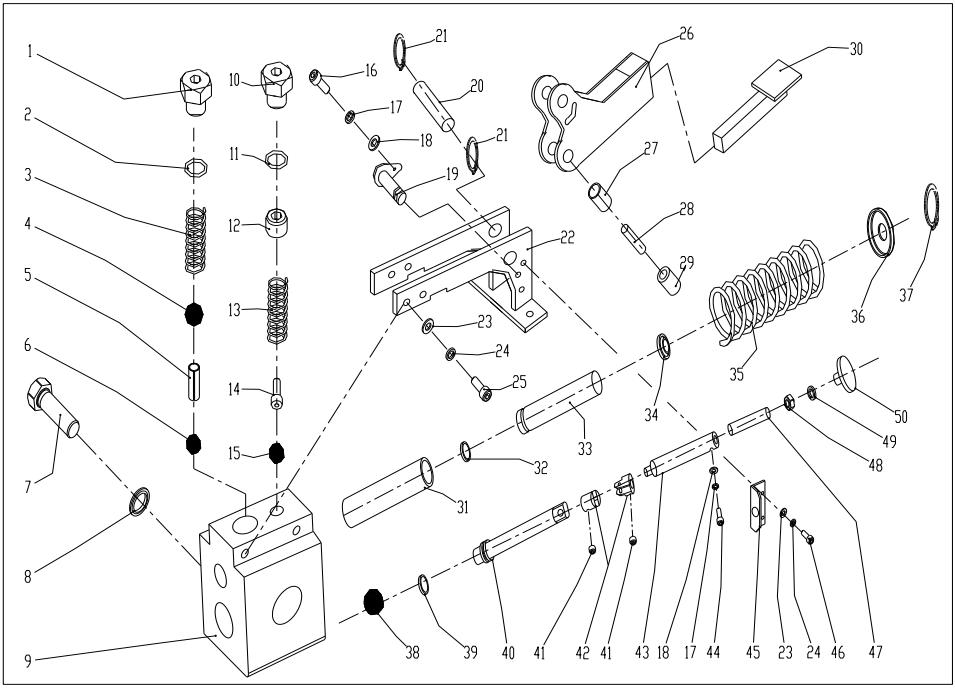

X-100C Part 31 Valve body list

NO.	DESCRIPTION	QTY	NO.	DESCRIPTION	QTY
1.	Screw G1/4	1	26.	Arm	1
2.	Combination washer 14	1	27.	Bushing	1
3.	Oil Spring	1	28.	Roller pin	1
4.	Steel ball D10	1	29.	Roller	1
5.	Pin 5x10	1	30.	Foot rod	1
6.	Steel ball D6	1	31.	Cylinder body	1
7.	Screw	1	32.	Y- ring d18xd10x5.8	1
8.	USS washer d10.37xd15.88x2.03	1	33.	Rod	1
9.	valve body	1	34.	DH ring d18xd15x4.5	1
10.	Oil screw	1	35.	Rod spring	1
11.	O-ring	1	36.	Spring seat 1	1
12.	Bolt M10x1x6	1	37.	Retaining ring 20	1
13.	Pressure spring	1	38.	Steel ball D8	1
14.	Spring seat	1	39.	O-ring d6.9x1.8	1
15.	Steel ball D5	1	40.	Oil rod	1
16.	Bolt M4x10	1	41.	Bolt M5x5	2
17.	Spring washer 4	1	42.	U-joint 10x20x45	1
18.	Washer 4	1	43.	Rod 1	1
19.	Pin	1	44.	Bolt M4X20	1
20.	Arm pin	1	45.	Support	1
21.	Ring 12	2	46.	Bolt M6x10	2
22.	Arm bracket	1	47.	Rod 2	1
23.	Washer4	6	48.	Nut M12	1
24.	Spring washer4	6	49.	Spring washer 12	1
25.	Bolt M6x12	4	50.	Control stick	1