

Elevating Work Platform

Operator’s Safety and Maintenance Handbook

Dec 2014

Operator’s Safety and Maintenance Handbook

Contents

Section 1	Page
DESCRIPTION	
Introduction	4
Description	4
Intended use	4
Modifications	5
Terminology	6
Section 2	
SPECIFCCATION	
Technical data	8
Operating site	8
Noise and Vibration	8
Limitations	8
Section 3	
SAFETY RULES	
Safety Rules	10
Section 4	
OPERATING INSTRUCTIONS	
Daily checks	11
Manoeuvring the platform	11
Engaging the brakes	12
Auto brakes	12
Battery isolation switch	12
Entering and leaving the platform	13
Control pendant	13
Emergency stop	14
Emergency lowering	14
Battery charging	14
Section 5	
MAINTENANCE	
Safety during maintenance	16
Periodical maintenance and checks	16
Storage	17
Lubrication	17
Hydraulic oil	17
Electrical schematic	18
Hydraulic schematic	19
Troubleshooting	20

Section 6
TRANSPORT INSTRUCTIONS
Lifting 21
Preparation for transport 21
Loading and unloading 21

Section 7
MAINTENANCE AND REPAIR RECORD
Maintenance and repair record 22
Notes 23
Daily checks – operator checklist 24

Section 8
SPARE PARTS LIST 25

Introduction

This handbook provides information on the safe operation of this work platform. Operators should read and understand all of the information contained within this manual prior to operating the work platform.

The handbook contains several warnings, these indicate situations which if not avoided could result in serious injury or death to persons, or damage to the machine or property.

Additional copies of this handbook are available from the manufacturer at the address below. Information contained in this handbook is based on the latest product information at time of publication.

Giant-Move Equipment Co., Ltd operate a policy of continuous improvement and therefore reserve the right to make product changes at any time without obligation.

Description

The truck is a scissor lift type work platform, which is manoeuvred manually into work positions and elevated and lowered using an electro-hydraulic control system.

- **240kg safe working load**
- **Auto brakes on front fixed wheels**
- **Easily manoeuvrable**
- **Pass through standard doors**
- **Simple operation**
- **Steel guard rails**
- **Non-slip platform**
- **Steerable wheels**
- **Manual brakes on rear swivel wheels**
- **Anti-crushing lowering delay**
- **Integral battery charger**
- **Emergency lowering facility**
- **Easily transportable**
- **Low maintenance**
- **Complies with EN280:2001**

Intended use

The machine has been designed to comply with the safety requirement of the Machinery Directive 2006/42/EC taking guidance from the European Standard BS EN280:2001 + A2:2009 Mobile Elevating Work Platform.

The machine is intended to be used to lift persons, plus essential tools and materials, to enable work to be undertaken at height. Typical applications will include maintenance, cleaning, painting, etc. at varying heights above ground level.

WARNING

THE MACHINE MUST NOT BE USED IN APPLICATIONS OR FOR USES OUTSIDE OF THE SCOPE OF THIS HANDBOOK. SHOULD A CERTAIN APPLICATION NOT BE COVERED, THEN THE MANUFACTURER SHOULD BE CONTACTED.

WARNING

OPERATION OF THIS MACHINE BY UNTRAINED OPERATORS MAY RESULT IN SERIOUS INJURY OR DEATH

Modifications

No modifications must be made to this machine unless the manufacturer has given full written approval. If in doubt contact the manufacturer for advice.

Terminology



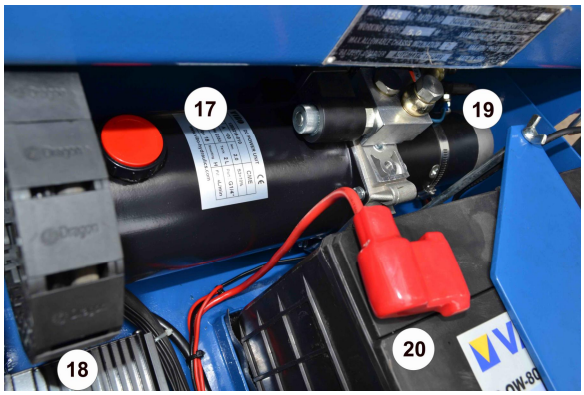



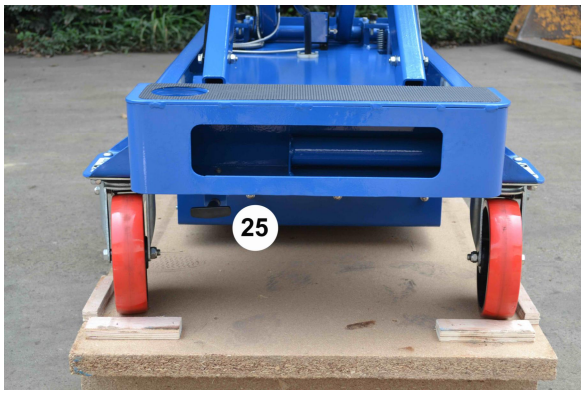

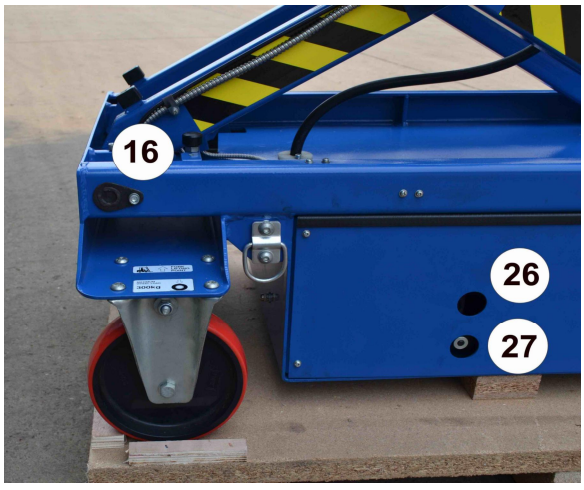

1. Control pendant	10. Maintenance props	19. Pump station
2. Emergency stop button	11. Forklift pocket (1 of 4)	20. Battery
3. Gate	12. Bubble spirit level	21. Battery condition meter
4. Guard rail	13. Ring(1 of 4)	22. Battery charging indicator
5. Handbook	14. Chassis	23. Battery charger socket
6. Platform	15. Manual brake (1 of 2)	24. Emergency switch
7. Charger leads	16. Auto front brakes	25. Emergency lowering valve
8. Scissor pack	17. Hydraulic tank	26. Working pressure valve
9. Main lift cylinder	18. Battery charger	27. Electromagnetic valve

Technical data

Model	ES20DA I	ES25TA I	ES30TA I	ES35TA I
Scissor	2	3	3	3
Capacity (kg)	240	240	240	240
Min. Height Without Load (mm)	610	700	700	720
Max. Height Without Load (mm)	2000	2550	3000	3500
Lifting Time Without Load (s)	7	13	15	15
Lifting Time With Load (s)	10	19	21	21
Platform Size (mm)	1016*526	1016*526	1106*526	1306*526
Battery	DC 12V, 80AH	DC 12V, 80AH	DC 12V, 80AH	DC 12V, 80AH
Front Wheel	ϕ 200	ϕ 200	ϕ 200	ϕ 200
Rear Wheel	ϕ 200	ϕ 200	ϕ 200	ϕ 200
Net Weight (kg)	304	341	358	405

Operating site

Select a site for the machine from which the platform will be able to reach the required work area. A visual inspection of the operating site should be made before setting up the machine. Particular attention should be given to the following items:

1. Ground conditions

Ensure that the ground on which the truck is to operate is capable of supporting the weight of the machine (including the weight of the operator plus tools and materials). Be aware of floors or coverings (e.g. manhole covers) that may not withstand point loading exerted by the castor wheels.

2. Ground flatness

The truck must only be operated on flat (0° chassis inclination) and level surfaces. The allowable chassis inclination is indicated when the spirit level bubble is within the marked limits. All castor wheels must be in full contact with the ground.

3. Obstructions

When manoeuvring, raising and lowering, ensure that there are no obstructions or persons that may be struck by the platform.

Noise and vibration

Noise levels emitted from this machine do not exceed 70 dB(A). Hand and arm vibration experienced on this machine does not exceed 0.5m/s^2.

Limitations

The truck is limited to operation indoors. The machine must not be used outdoors. Please

consult the manufacturer if you are unsure of any application for which the machine is to be used.

This machine has been tested for Electromagnetic Compatibility (EMC) however, operation near to high powered radio transmission apparatus (e.g. radar, antennae) or within strong electrical and/or magnetic fields may affect some features of this product.

WARNING

THIS MACHINE HAS NOT BEEN DESIGNED FOR OPERATION WITHIN POTENTIALLY EXPLOSIVE ATMOSPHERES

WARNING

THIS MACHINE IS NOT ELECTRICALLY INSULATED AND MUST NEVER BE USED FOR LIVE LINE WORKING. DEATH OR SERIOUS INJURY CAN RESULT FROM CONTACT WITH, OR INADEQUATE CLEARANCE FROM, ELECTRICAL CONDUCTORS

Safety Rules

NEVER Exceed the rated capacity (Safe Working Load or SWL) of the platform (240kgs).

NEVER Use the truck as a 'crane' (e.g. by suspending loads from beneath the platform.

NEVER Make any attempt to increase the working height or outreach of the platform (e.g. by use of stepladders in the platform).

NEVER Operate truck if the bubble spirit level is outside the larked limits.

NEVER Manoeuvre truck on an inclined surface otherwise it may become uncontrollable.

NEVER Manoeuvre truck whilst in its elevated position, as this may cause instability.

NEVER Manoeuvre truck with a person or materials in the platform.

NEVER Enter or exit the platform unless the platform is in the lowered and transport position

NEVER Apply external side loads to the platform or scissor structure.

NEVER Allow persons at ground level to operate the controls whilst the platform is occupied (unless in an emergency situation).

NEVER Operate truck outdoors.

NEVER Attempt to overreach.

NEVER Interfere with, wedge or attempt to override hydraulic, electrical or mechaincal safety devices.

ALWAYS Check that there are no obstructions or persons that may be struck by the platform before and during the raising and lowering of the platform.

ALWAYS Ensure that the access gate is closed once the operator has entered the work platform.

ALWAYS Ensure that another responsible person on site knows how to use the emergency controls.

ALWAYS Undertake the daily checks recommended in this handbook prior to operation of the machine.

ALWAYS Ensure that all instructions, warning and Safe Working Load decals are clean and legible.

ALWAYS Ensure truck is positioned on adequate ground to support the weight of the machine.

ALWAYS Ensure that sufficient clearance is given if working near to live conductors.

ALWAYS Ensure the manual rear brakes have been engaged before elevating the work platform.

ALWAYS Ensure that auto front brakes are functioning correctly before attempting to the machine.

ALWAYS Ensure that the platform does not come into contact with fixed objects (e.g. building, etc.) or moving objects (e.g. vehicles, other plant equipment, etc.).

ALWAYS Replace any removable guard rails (e.g. close and lock access gate) to enable full edge protection to be maintained.

ALWAYS Ensure that the load is evenly distributed within the platform.

ALWAYS Ensure the safety of persons that may enter the area around the platform (e.g. cordon off the area to prevent persons entering the danger area).

ALWAYS Ensure hands are kept within the confines of the guard rails whilst elevating the work platform.

Daily checks

Prior to operating the truck, the following items must be checked:
●Structure (e.g. damage, cracks, corrosion, abrasion, welds, connections)
●Platform (floor, rails)
●Castors (smooth movement, damage)
●Rear manual brakes
●Auto front brakes
●Hydraulic oil
●Oil leaks
●Battery condition
●Raise and lower functions (including descent delay)*
●Emergency stop and lowering functions
●Limit switch
●Safety decals

*The raise and lower functions can be tested by removing the upper control box from its holder in the work platform and using the controls whilst at ground level.
(**NOTE:** unless in an emergency situation, this practice must not be employed when a person is in the work platform).

If the above checks reveal malfunctions or damage on the truck, then the machine must not be used until the problem is rectified. If in doubt, seek further assistance from the manufacturer.

If safety decals are no longer legible or missing, please contact the manufacturer for replacements.

The **Daily Checks** page in Section 7 of this handbook may be photocopied to provide an aide memoir for operators when undertaking these important checks.

WARNING
BEFORE OPERATING YOUR TRUCK, YOU MUST ENSURE THAT YOU HAVE BEEN ADEQUATELY TRAINED IN ITS USE AND HAVE FULLY READ AND UNDERSTOOD THIS OPERATOR'S HANDBOOK, PAYING PARTICULAR ATTENTION TO SECTION 3 - SAFETY RULES.



Manoeuvring the platform

Manoeuvre the platform into position using both hands on the platform rails as shown. Take care to avoid trapping hands or feet whilst manoeuvring the platform.

Never manoeuvre the truck whilst it is elevated or with a person, tools or materials in the platform.

Engaging the brakes

Always ensure that both rear manual castor brakes are engaged before elevating the work platform to prevent any inadvertent movement. The brakes are engaged by pushing down on the lever. Releasing the brake is simply a reversal of the engaging procedure. Before operating, please ensure that both of the manual rear brakes are engaged.

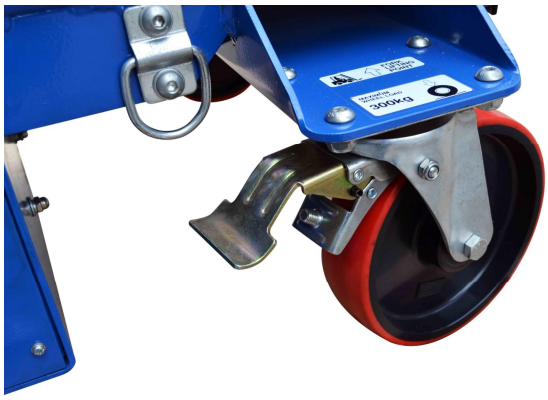

Auto brakes

On the truck is fitted with a secondary automatic brake system acting on the front fixed wheels. The truck does not require stabilisers if these auto brakes are fitted. This system should be checked for functionality before attempting to use the machine. To check, leave the rear manual brakes ‘OFF’ and elevate the machine approximately 150mm. Hold the handrail on both sides at the gate end and attempt to push the machine. It should be difficult to push the machine of the auto brakes are functioning correctly. Please consult the manufacturer if the machine is easily pushed. Before operating please ensure the manual rear brakes are engaged.

Battery isolation switch

The truck is provided with an emergency switch which is used to isolate the battery and therefore the electrical system, preventing unauthorized use. To enable the electrical system, pull out the switch, making sure the emergency stop button is fully released. Ensure that when the machine is not in use, the emergency stop button is depressed.



Entering and leaving the work platform

Always use three points of contact when entering or exiting the platform, using the handholds provided. For example, use two hands and one foot, as shown below.





Use the step provided on the base of the machine.

On entering the platform, ensure that the gate is closed behind you.

Control pendant

The control pendant houses the platform raise and lower controls.

Pressing the enable button and selecting ‘UP’ raises the platform.

Pressing the enable button and selecting ‘DOWN’ lowers the platform.



To avoid crushing and shearing hazards, a delay feature is fitted which actuates when the platform is lowered to the transport position. The platform will momentarily stop to enable the operator to look around the machine to determine whether any persons are adjacent to the scissor mechanism. After a time delay, the lowering control will be enabled once more to permit the operator to continue to lower to the transport position.

Emergency stop

An emergency stop button is provided on the control pendant. Once depressed, this isolates power to the raise and lower functions.

To restore functionality, twist the emergency stop button clockwise to release the button, as shown below.





Emergency lowering

Pull out the plunger until platform starts to lower. To stop the platform at any time, loosen it.





Battery charging

A battery condition meter is fitted to the truck as shown. To accurately check the battery condition, a load must be applied across the battery, elevating the machine from ground level will achieve this. Stand away from the machine with the control pendant and press the UP button whilst observing the bars on the meter. This meter displays the amount of charge in

the battery. All bars illuminated shows that the battery is fully charged.

If less than four bars on the display, the battery requires charging.
The truck is supplied with a dedicated battery charger, which is placed in the battery drawer. Do not use any other type of battery charger to charge your machine.

To charge the battery, follow these steps:

1. Turn the power off.
2. Connect the battery charger socket, then the power supply. It will begin to charge.
3. It will shut off automatically once finished. The battery should be fully recharged after a period of 8-12 hours, which is indicated by the light illuminating on the battery charging indicator panel as shown.

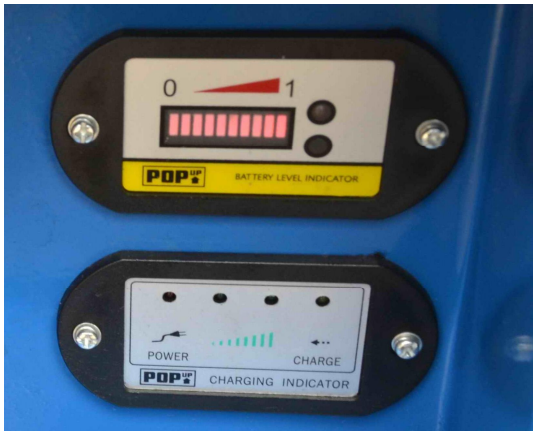



Safety during maintenance

When performing maintenance on the truck with the platform elevated, always ensure that the maintenance props are engaged as shown.





WARNING

FAILURE TO ENGAGE THE MAINTENANCE PROPS MAY RESULT IN THE PLATFORM LOWERING WITHOUT WARNING.

Periodical maintenance and checks

The following checks should be undertaken at the recommended intervals shown:

	Daily/Pre-use	Monthly	6 Monthly	12 Monthly
Inspect structure	●	●	●	●
Inspect platform	●	●	●	●
Check castors	●	●	●	●
Check manual rear brakes function	●	●	●	●
Check auto brakes function	●	●	●	●
Inspect for oil leaks	●	●	●	●
Check battery condition	●	●	●	●
Check raise/lower functions	●	●	●	●
Check emergency stop	●	●	●	●
Check emergency lower	●	●	●	●
Check lights function	●	●	●	●
Inspect training card and safety decals	●	●	●	●
Check hydraulic oil level		●	●	●
Inspect limit switches		●	●	●
Inspect wiring		●	●	●
Check electrical connectors		●	●	●
Lubricate roller guides		●	●	●
Lubricate grease nipples		●	●	●
Lubricate pivot pins			●	●
Lubricate castor mounts			●	●
Replace hydraulic oil				●

Prior to first use of the truck, all daily/pre-use checks must be undertaken. If the machine has been in storage for a long period of time, it may be necessary to undertaken additional checks and test as per the table on the preceding page (e.g. lubrication, hydraulic oil, battery condition).

The Lift Operation and Lifting Equipment Regulations 1998 (LOLER) require that lifting equipment for lifting persons must be THOROUGHLY EXAMINED every six months.

Following any maintenance on the truck, a full function test should be undertaken to ensure correct operation of the machine.

It is essential that only manufacturer's approved replacement parts are used when maintenance and servicing the truck. Failure to do so may result in an unsafe or unstable machine.

Storage

The electrical components of this truck are not protected from external weather conditions and the machine should therefore not be stored outdoors. Storage in a clean, dry indoor environment is recommended.

Frequent checks on the condition of the machine should be made to ensure no excessive deterioration occurs due to the environment in which the machine is housed.

Lubrication

The required lubrication points are shown opposite.

Lubrication points are to be found on the end of the scissor pack at both ends of the machine.

The lubricant recommended for use with this truck is: standard machine grease.

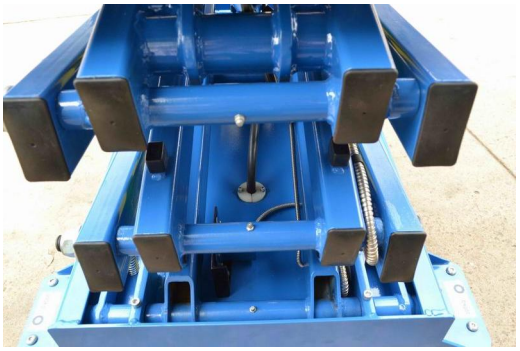

Hydraulic oil

The hydraulic oil level can be checked by removing the filler cap. The correct amount of oil is in the tank when the tip of the level rod has hydraulic oil on it. This check must be carried out on a level surface.

The hydraulic oil can be topped up by adding oil to the filler as shown below. Take care not to spill hydraulic fluid over any of the surrounding machine components.

The hydraulic oil can be drained by removing the tank. Remove the bolts as shown above

and separate the tank from the pump body. The hydraulic fluid can then be correctly disposed of.

Reassembly is the reverse of above.

The hydraulic oil recommended for use with this truck is: mineral basis hydraulic oil with lubricating, antifoaming, anti-corrosive, antioxidant HL-HLP (ISO and UNI HM)-HV-HLPD performances according to DIN51524 part 1-2 standards.

Minimum viscosity	**15cts (23°E / 77, 39 SSU at 100°F**
Max. viscosity at starting up	**800cts (105,6°E / 3708 SSU at 100°F**
Max. working viscosity	**100cts (13,2 E / 463,5 SSU at 100°F**
Suggested viscosity range	**25÷40 cts = (3,47÷5,35°E / 119,3÷186,3 SSU a 100°F**
Allowed temperature	**Max 80°C (176°F)**
Recommended temperature	**30÷60°C (86÷140°F)**

Electrical schematic

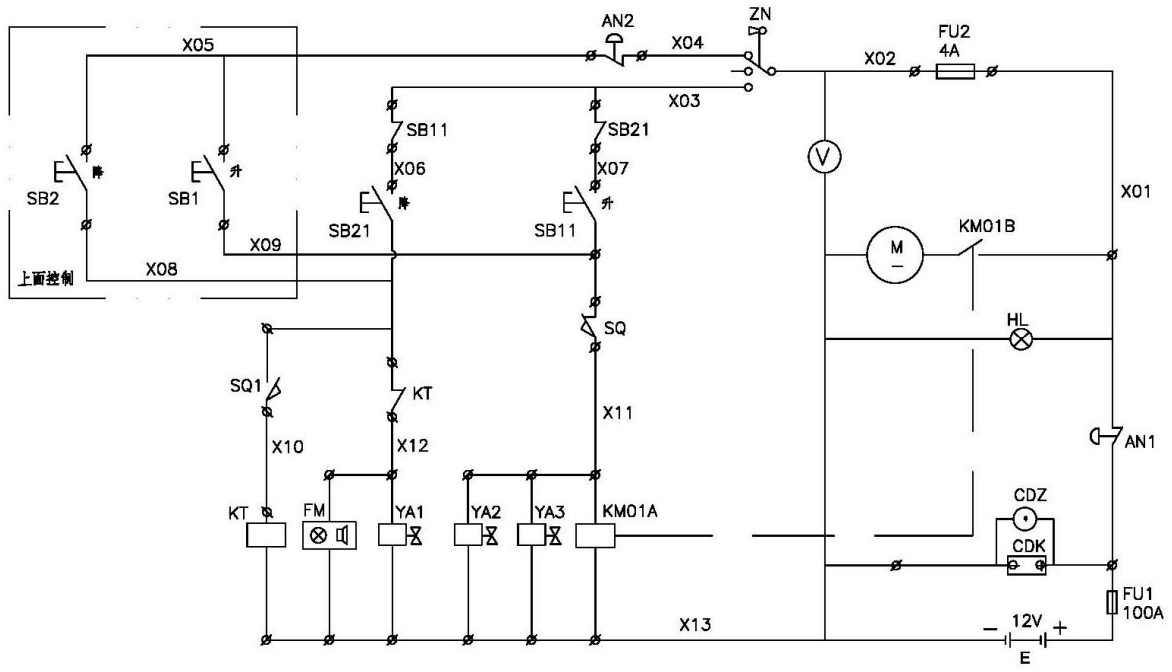

Hydraulic schematic

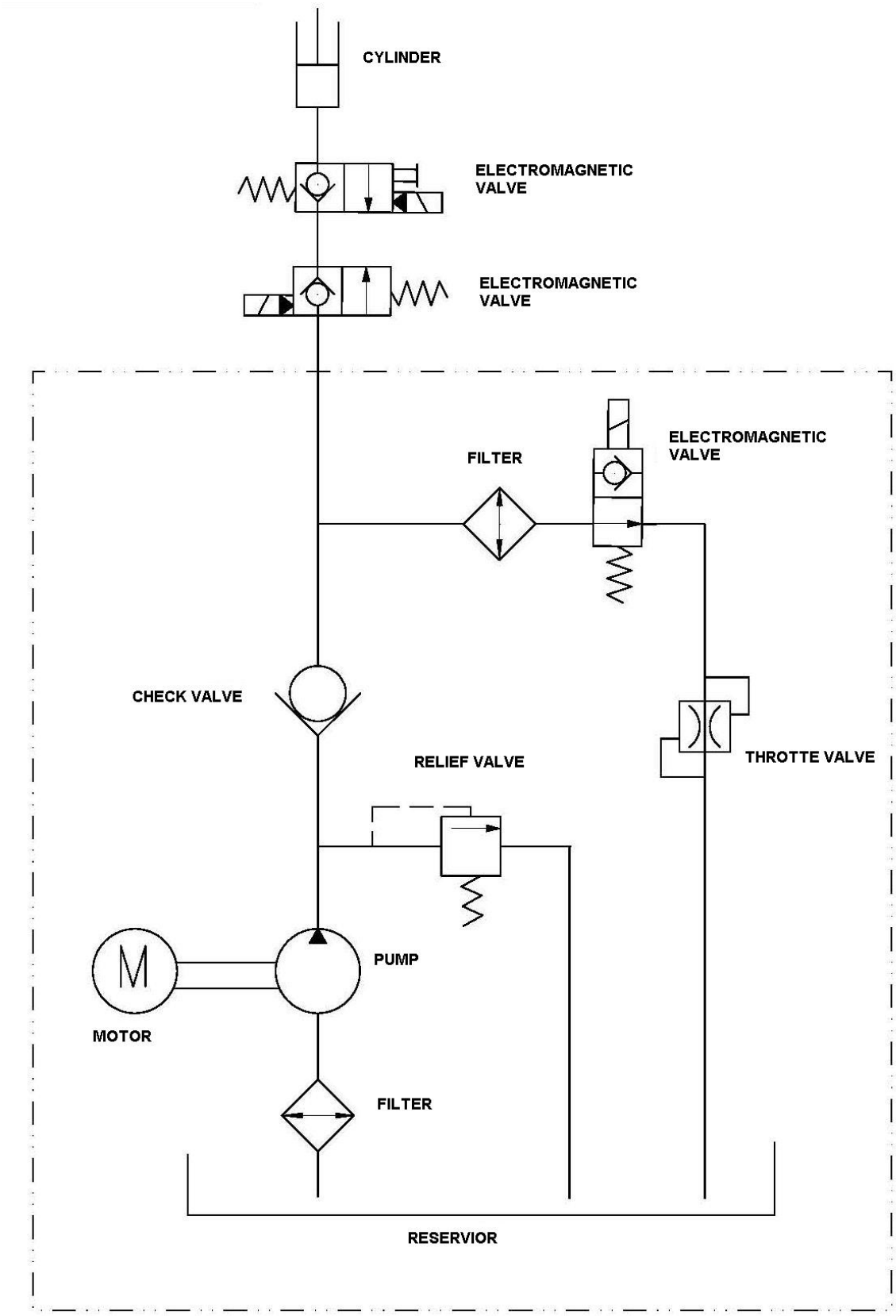

Troubleshooting

Problem	Cause	Repair
Platform does not raise (motor not running)	1. Faulty wiring 2. Battery is disconnected 3. Battery charge is insufficient	1. Check the wiring referring to the electrical schematic 2. Reconnect the battery 3. Charge the battery
Platform does not raise (motor running)	1. Faulty adjustment of relief valve 2. Faulty hydraulic pump 3. Insufficient hydraulic oil	1. Adjust relief valve 2. Replace power pack 3. Add hydraulic oil
Platform creeps (uncontrolled lowering)	1. Oil leakage in power pack 2. Oil leakage from hydraulic circuit	1. Replace lowering valve 2. Check hydraulic circuit and repair
Oil leakage from cylinder	Faulty sealing	Replace sealing
Oil leakage from piping or joint	Insufficient tightening or seal invalid	Tighten joint again or replace seal
Oil leakage from air breather	Excessive quantity of oil	Reduce oil quantity

Lifting

Four rings are provided on the truck for lifting of the machine.

Preparation for transport

Prior to transporting the truck on a vehicle, ensure that the following precautions are taken in order to avoid damage to the machine or damage to the transporting vehicle.

1. Ensure that the platform is fully lowered to its rest position.
2. Ensure that loose items (e.g. control pendant, battery charger) are secured to the platform.
3. Ensure brakes are engaged on both rear castor wheels.

Loading and unloading

When loading or unloading the truck, use one of the methods

When using a forklift to lift the truck, ensure the forks are sufficiently inserted into the forklift pockets in the base of the machine. Safety decals applied to the truck show the location of the forklift pockets.

When using a tail lift to load or unload the truck ensure that the manual brakes are applied to both rear castor wheels. Ensure that the capacity of the tail lift is sufficient to handle the truck. Take care when manoeuvring the machine on the tail lift.

WARNING

NEVER ATTEMPT TO LOAD OR UNLOAD THE TRUCK BY MANUAL EFFORT ONLY, SERIOUS INJURY, MACHINE OR PROPERTY DAMAGE COULD RESULT



Maintenance

Date	Scheduled maintenance undertaken	By

Repairs

Date	Repairs undertaken	By

Examinations/tests

Date	Repairs undertaken	By

PLEASE PHOTOCOPY THIS PAGE FOR YOUR OWN USE, AS REQUIRED.

Notes

Daily checks – operator checklist

The following checklist has been provided to enable daily checks to be undertaken prior to use of this TRUCK. These checks should be carried out each working day or at the beginning of each shift. The purpose of the checks is to identify any wear and tear or malfunction of the machine's components and systems.

WARNING

FAILURE TO UNDERTAKE THESE CHECKS MAY RESULT IN DEFECTS ON, OR DERERIORATION OF THIS TRUCK GOING UNDETECTED AND POSSIBLY RESULTING IN AN UNSAFE CHAINE

Note that Regulation 8 of the Lifting Operation and Lifting Equipment Regulations 1998 (LOLER) require that persons using lifting equipment have appropriate training and instructions to enable them to identify whether lifting equipments is safe to use.

Machine number	

1. Prior to operating the platform, the following items must be checked:

OK? (please tick)	**OK?** (please tick)
Structure	**Battery condition**
Platform	**Raise and lower**
Castors	**Emergency stop**
Rear manual brakes	**Emergency lower**
Front auto brakes	**Limit switch**
Hydraulic oil	**Safety decals**
Oil leaks	
Date	
Checked by	

2. Use raise, lower and emergency stop functions to ensure correct operation.

Should any defects be identified in any of the above areas, these should be reported to your employer. It may be necessary to further seek assistance from the supplier of the machine, this may be the hire company or the manufacturer. You should only rectify any defects if you are authorized and competent to do so.

Do not use the machine unless each of the items above is checked and stated OK.