Instruction Manual

SKID LIFTER

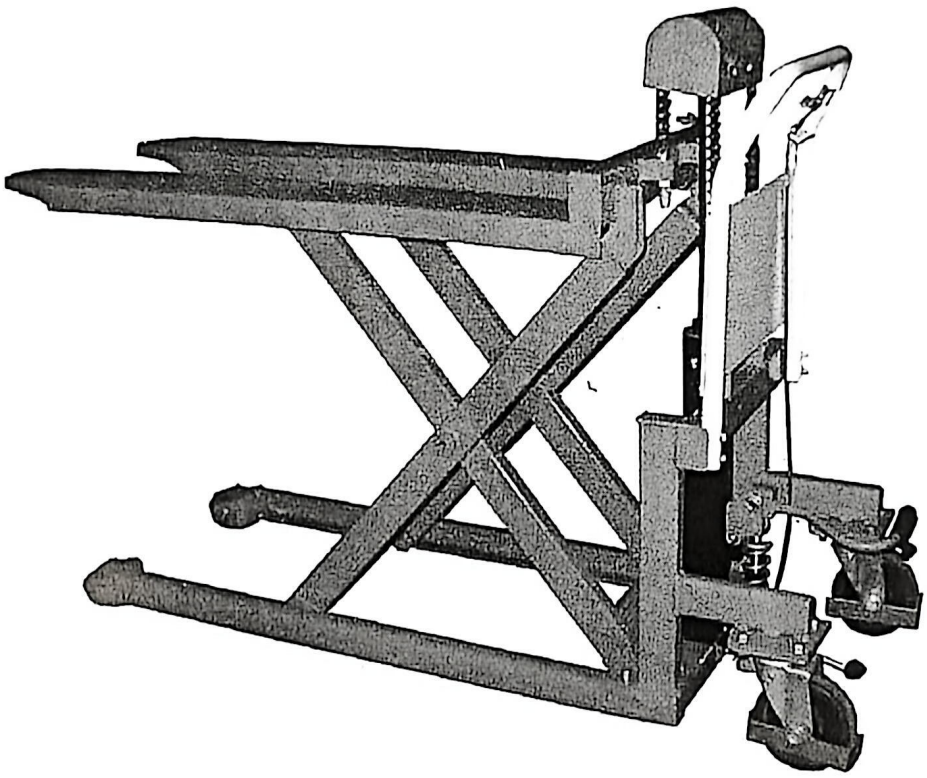

Note: Owner/Operator must read and understand this instruction manual before using the skid lifter.

Contents

1. WARNING

2. CAUTION

3. NAME OF PARTS

4. DAILY INSPECTION

5. OPERATION

6. SPECIFICATIONS

7. HYDRAULIC CIRCUIT

8. REGULAR INSPECTION

9. TROUBLE SHOOTING

THANK YOU FOR CHOOSING OUR SKID LIFTER. FOR YOUR SAFETY AND CORRECT OPERATION, PLEASE CAREFULLY READ THE MANUAL BEFORE USE.

NOTE: All of the information reported herein is based on data available at the time of printing. The factory reserves the right to modify its own products at any time without notice or incurring in any sanction. Please verify with the factory for possible updates.

1.



WARNING! *If operating the work skid lifter improperly, a person may be seriously injured. Therefore, operate properly according to the following instruction.*

- ◇ DO NOT put hand near chain sprocket or other moving parts. SEVERE PERSONAL INJURY could result.
- ◇ DO NOT allow another person to stand in front of or behind lifter when it starts to move.
- ◇ ALWAYS travel with fork in lowered position.
- ◇ NEVER sit, stand or ride on forks or platform. SEVERE PERSONAL INJURY could result.
- ◇ NEVER go under forks or platform. SEVERE PERSONAL INJURY or DEATH could result.
- ◇ DO NOT use in area of multi level floor surface that could create loss control and result in SEVERE INJURY & PROPERTY DAMAGE.
- ◇ DO NOT use lifter on slope, unlevel or soft surface. Lifter may become uncontrollable, SEVERE PERSONAL INJURY and PROPERTY DAMAGE could result.
- ◇ KEEP FEET CLEAR of rolling wheels that could result in SEVERE PERSONAL INJRY.
- ◇ DO NOT load one fork more than the other and DO NOT load tips on forks. SEVERE PERSONAL INJURY and PROPERTY

DAMAGE could result.

- ◇ DO NOT overload lifter. ALWAYS stay within designated capacity and load center rating. SEVERE PERSONAL INJURY and PROPERTY DAMAGE could result.
- ◇ Replace chain every four years or if inspection reveals, excessive wear on links, pins, side plates and deformed, bent rusted or broken links.
- ◇ SHEARING HAZARD NEVER place hands or feet under lowering forks. SEVERE PERSONAL INJURY could result.

2.



CAUTION! *If operating the skid lifter improperly, a person may be injured. Therefore, operate properly according to the following instruction.*

- ◇ Hazard or unsafe practice which, if not avoided, may result in MINOR or MODERATE PERSONAL INJURY and PROPERTY DAMAGE.
- ◇ READ THE OPERATION MANUAL COMPLETELY BEFORE USING AND THOROUGHLY UNDERSTAND AND FOLLOW ALL SAFETY INSTRUCTION.
- ◇ This lifter is designed to use with stable uniform load on a solid lever floor, DO NOT use the lifter for any other purpose than its intended use.
- ◇ Lifter shall be operated by TRAINED personnel only. OPERATOR shall read "Operation Manual" completely and thoroughly understand the controls and operation of this equipment BEFORE operating the lifter.
- ◇ ALWAYS observe lifter and ALWAYS stay at the controls while the lifter is in motion. RELEASE controls and STOP lifter immediately if load on lifter appears to become unstable. NEVER leave the loaded lifter unattended unless the forks are in the fully lowered position.

- ◇ DO NOT slide the load on or off the forks. The lifter may move allowing the load to fall. SEVERE PERSONAL INJURY and PROPERTY DAMAGE could result.
- ◇ DO NOT use lifter with unstable, unbalanced or loosely stacked load. Unbalanced loads may become unstable and fall. SEVERE PERSONAL INJURY and PROPERTY DAMAGE could result.
- ◇ ALL lifter service must be performed by qualified personnel only.
- ◇ DO NOT use forks of lifter as a hoist or to pull up the load. SEVERE PERSONAL INJURY and PROPERTY DAMAGE could result.
- ◇ ALWAYS keep feet, hands and fingers away from casters, load wheels and all moving components. SEVERE INJURY could result.
- ◇ ALWAYS perform maintenance and inspections with lifter unloaded.

Skid lifter is NOT waterproof and is intended to be used in a dry environment.

3.NAME OF PARTS

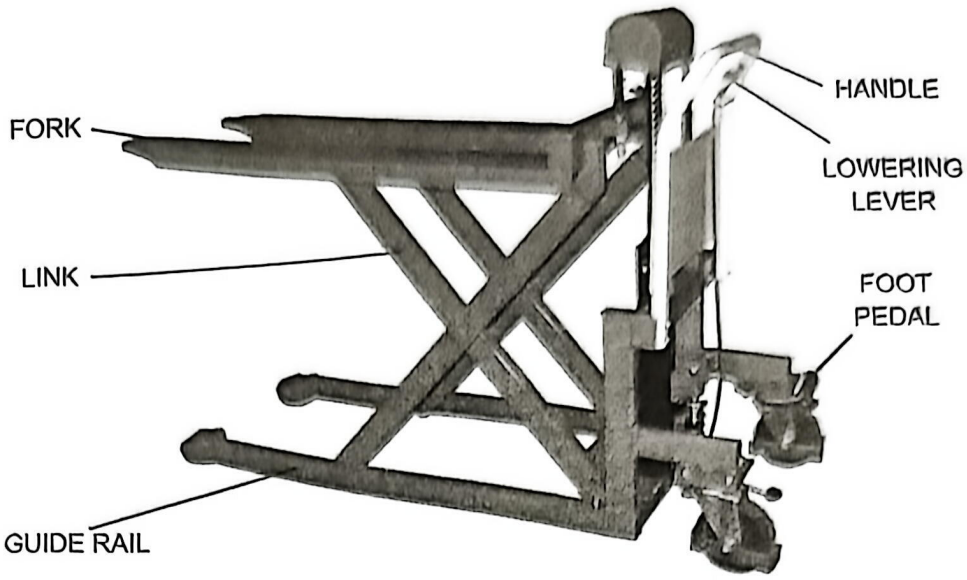

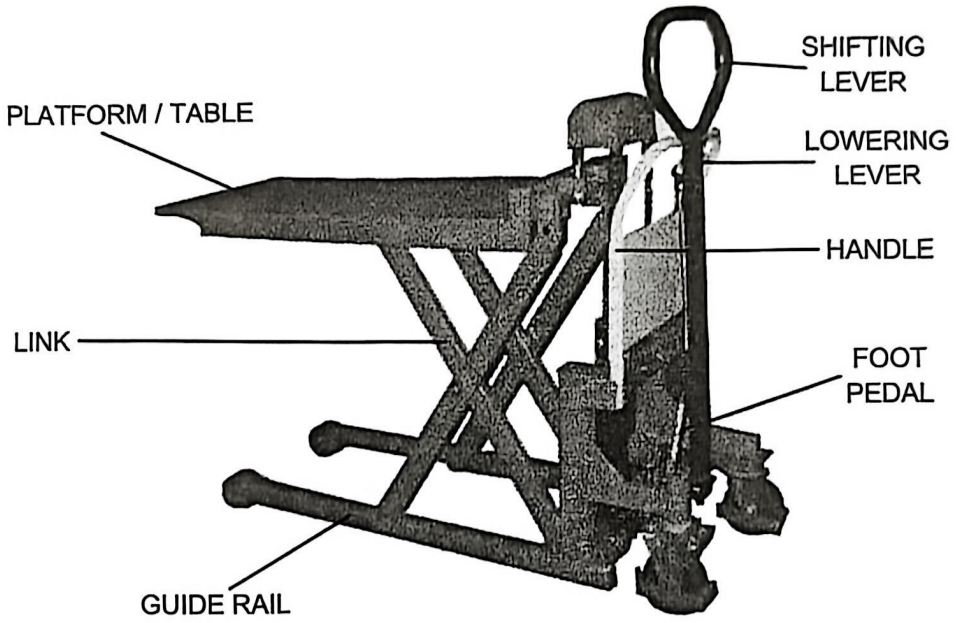

4.DAILY INSPECTION

Daily inspection is effective to find the malfunction or faulty on the skid lifter. Check the skid lifter according to the following points before operation.



CAUTION! *Do not use the work positioner if any malfunction or fault is found.*

◇ Check scratch, bending or crack on the skid lifter.
◇ Check smooth movement of the wheels.
◇ Check if there is oil leakage from the cylinder.
◇ Check vertical creep of the table.
◇ Check the function of brake.
◇ Check if all the bolts and nuts are firmly tightened.

5.OPERATION

■ LOADING DIAGRAM

The maximum capacity on forks/platform is listed as follows.

Model	Max. Capacity
SL50S	500kg
SL50L	
PL50S	
PL50L	
SL100S	1000kg
SL100L	
PL100S	
PL100L	

However the capacity fluctuates according to the position of load center. The following diagrams are showing the relation between the position of load center and capacity.

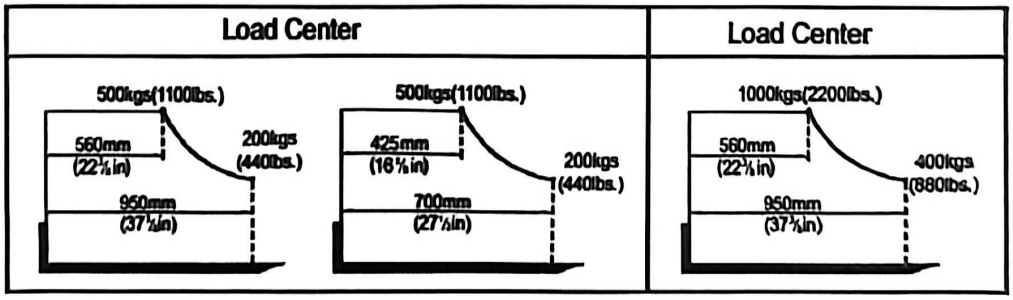

Example: SL50S

If the load center is located at the position of 950mm from the root

of forks, the max. capacity become 170kg. Do not load more than 170kg.

■ Operation of Brake



CAUTION! *Always brake skid lifter when it is not in motion.*

◇ Brake the wheel

Press the brake pedal on this of brake pedal.

◇ Releasing the brake

Press the brake pedal on the other side of brake pedal.

(Refer to the following figure.)

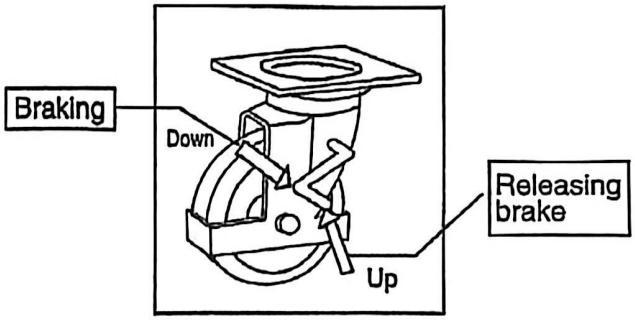

■ Lifting up forks



CAUTION! *Do not overload the skid lifter.*
Do not load one fork more than the other.

◇ Insert the forks to the pallet to be lifted up and brake the lifter.

◇ Press lifting pedal down by foot several times and forks lift up.

(Refer to the following figure.)

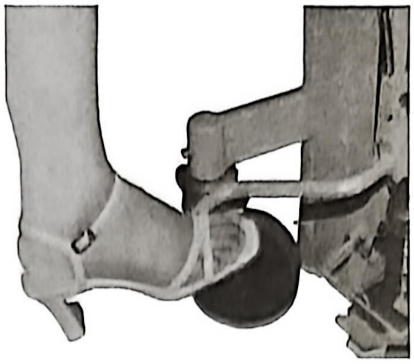

■ Lowering forks



CAUTION! *Do not lower forks with load too fast and stop suddenly. Impact load could be created and lifter could be damaged.*

◇ Check if there is nothing under the forks or load.

◇ Raise the lowering lever upward and forks lower.
(Refer to the following figure.)

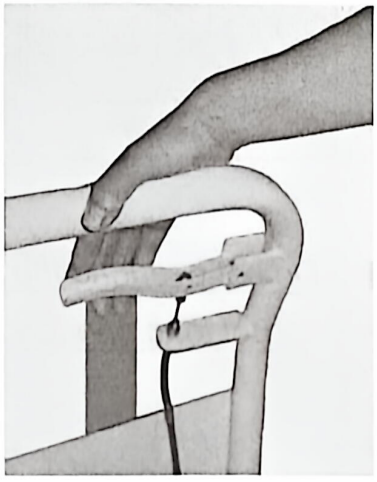

■ Moving the skid lifter



WARNING! DO NOT move skid lifter on slope or inclined surface. Skid lifter becomes uncontrollable and creates danger.

◇ Make the load stable to prevent it from falling.

◇ Lower the forks down to the height of approx. 200mm from the floor.

◇ Release the brake and move SL50 & PL50 with holding

maneuver handle move SL100 & PL100 with up-handle.

KEEP watching the condition of load. Stop operating skid lifter if load becomes unstable.

6.SPECIFICATIONS

Model	SL50S	SL50L	SL100S	SL100L	PL50S	PL50L	PL100S	PL100L
Capacity (kg)	500		1000		500		1000	
Table	Without table				With table			
Lowered height h(mm)	88				89			
Max. height H(mm)	825				833			
Fork length L(mm)	1115							
Platform length L(mm)					1115			
Fork width W(mm)	526	691	526	691				
Platform width W(mm)					538	703	538	703
Pump strokes to Max. height	60		90		60		86	
Front roller (mm)	ϕ70x68 polyurethane							
Steering wheel (mm)	ϕ150x40 polyurethane							
Overall length L1(mm)	1550		1640		1550		1640	
Overall width W1(mm)	526	691	687	852	538	703	693	858
Overall height H1(mm)	1012		1307		1012		1307	
Net weight (kg)	107	116	135	138	122	138	150	158

7.HYDRAULIC CIRCUIT

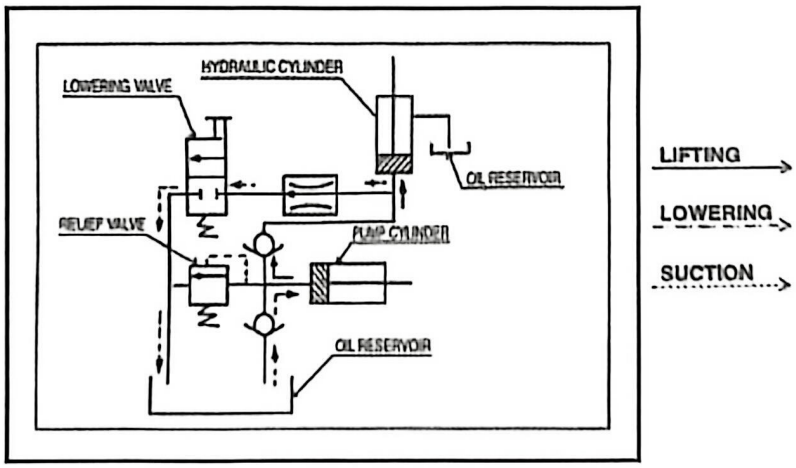

8.REGULAR INSPECTION

Perform the regular inspection for the safety operation.

- Check if there is any rust, scratch, crack or kink on the chain. (Every month)
- Lubricate with grease the guides where roller moves. Also, lubricate the grease nipples and chain. (Every month)
- Lubricate all the pivoting points and axles. (Every 6 months)
- Replace the hydraulic oil. (Every 12 months)

9.TROUBLE SHOOTING

PROBLEM	CAUSE	SOLUTION
Forks do not raise load without load.	No oil in reservoir	Add oil.
	Value remains open as pressure pin entered into valve.	Replace valve and pressure pin.
Forks raise but it lowers even if lowering lever is not operated.	Insufficient seating of cone seat	Replace con and cone seat.
	Wear of packing in lift cylinder	Replace packing.
Forks do not lower even if lowering lever is operated.	Damage on control cable	Replace control cable.