# Instruction Manual

## Low Profile Lift Table

# QN500
# QN1000

**Note**: Owner/Operator must read and understand this instruction Manual before using the low profile lift table

THANK YOU VERY MUCH FOR SELECTING OUR PRODUCT. THIS INSTRUCTION MANUAL DESCRIBES CORRECT OPERATING METHOD TO ENSURE PROLONGED SERVICE LIFE. PLEASE READ AND COMPLETELY UNDERSTAND THIS MANUAL BEFORE OPERATING THE LOW PROFILE LIFT TABLE. ALWAYS KEEP THIS MANUAL AT AN APPROPRIATE PLACE. IF THE MANUAL OR WARNING DECAL IS MISSING, PLEASE CONTACT WITH DEALER.

*Note: This Manual has been prepared for skilled and competent personal. It provides instructions for using the product correctly and parts list. This Manual cannot replace the professional skills and expertise of the user.*

**1.**



**WARNING!** *If operating the lift table improperly, a person may be seriously injured. Therefore, operate properly according to the following instruction*

◇ Read & thoroughly understand the Instruction Manual completely before using. Follow all safety instructions strictly.

◇ It is necessary to check all safety devices before operation.

◇ Make sure that there are no obstacles in the working area.

◇ Do not put foot or hand in scissors mechanism or through frame.

◇ Screw the lifting eyes on the base frame before working on the lift table.

◇ Do not overload the lift table. Load should be distributed on the table according to relevant load distribution chart.

◇ Pay attention if input air pressure is as same as the input specification of the lift table.

◇ Use the lift table on flat and solid ground.

◇ All the gas source connection and disconnection operations must be carried out by skilled and competent personal.

◇ While operation, it is forbidden to contact the moving parts of the lift table.

◇ While the lift table moving, it is forbidden to adjust or to move the load.

◇ It is forbidden to lift the load, which perhaps does harm to a person or other object.

◇ It is forbidden to operate the lift table while a person is under the table.

◇ It is forbidden to operate the lift table even if there is small structure distortion.

◇ Do not use in an explosive or flammable place.

◇ Avoid hard or sharp objects to touch airbag

◇ Use the clean, dry gas source

**Note！Maximum load refers to the load being uniformly distributed over the entire platform area.**

In accordance with **EN1570,**Safety Requirements for Lifting Tables，the basic requirements are:

Ⅰ 100% of the rated load(maximum load) uniformly distributed over the entire platform area.

Ⅱ or 50% of the rated load(maximum load) uniformly distributed over half the length of the platform.

Ⅲ or 33% of the rated load(maximum load) uniformly distributed over half the width of the platform.

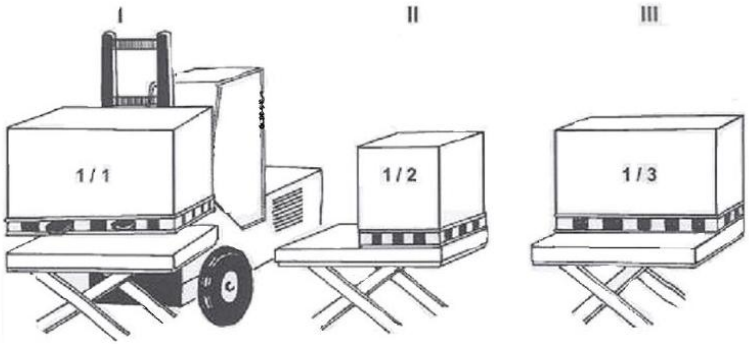

**2. INSTALLATION OF LIFT TABLE ON THE FLOOR/GROUND**



Double or triple vertical scissors tables must be fixed to the floor/ground by means of expander bolts or similar，We also recommend that all other lift table types，with the exception of mobile units，are securely affixed on the floor to Prevent unintentional movement

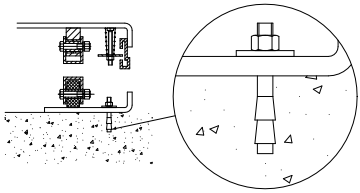

## Mechanical installation

1.The base frame of the lift table is not as standard self -supporting .It is important that the flooring is flat and stable and that the installation area , when necessary, is well drained.

2. Utilize a lifting sling through the scissor package. Tie the base frame to the platform or the scissor mechanism. Locate the table into the desired position.

3. Check the operation of the safety frame on all sides.

4.The control device should be positioned so that the operator has a clear view over the lift table and the load at all times when the lift is operated.

**3.**



**CAUTION!** *If operating the lift table improperly, a person may be injured. Therefore, operate properly according to the following instruction.*

◇ The lift table is a movable lifter designed to lift or lower rated load. Do not use it for other purpose.

◇ Do not allow a person to operate the lift table, who does not understand its operation.

◇ It is forbidden to change the lift table without manufacturer's written admission.

◇ It is necessary to use the spare parts designated by

manufacturer.

◇ Make sure to keep a distance between the table and ambient objects enough to operate the lift table safely.

◇ Keep the gas source system under clean and safe condition.

◇ Always do maintenance and routine check while the lift table is unloaded.

◇ The lift table is not waterproof and should be used in a dry environment.

## 4. DAILY INSPECTION

Daily inspection is effective to find the malfunction or fault on the lift table. Before operation, check the lift table according to the following points.



**CAUTION!** *Do not use the lift table if any malfunction or fault is found.*

◇ Check all the terms of WARNING and CAUTION.

◇ Check scratches, bending or crack on the lift table.

◇ Check smooth movement of the table.

◇ Check if there is any gas leakage.

◇ Check the vertical creep of the table.

◇ Check if all the bolts and nuts are firmly tightened.

## 5. OPERATING THE LIFT TABLE

■ LOADING

The maximum capacity of the lift table is 1000kg. Load should be distributed on the lift table equably.

■ Lifting the Table



**CAUTION!** *Do not overload the lift table. Ensure the balance of loading. Do not load partially or concentrically.*

◇ Down the right side of UP control switch and airbag starts to work to lift the load.

◇ Loose the UP control switch and airbag stops working.

■ LOWERING THE TABLE



**WARNING!** *Do not put foot or hand in scissors mechanism.*

◇ Down the Left side of DOWN control switch and the table will lower.

◇ Loose the DOWN control switch and the table will stop.

NOTE

■ TRANSPORTATION /STORAGE

◇ Transport loading and unloading operations should be prohibited Crackdown

◇ Products prohibit mixed with oil, acid, alkali substances

◇ Should be placed on the public coffers dry and ventilated to prevent the sun exposure and rain soaked

## 6. PNEUMATIC SCHEMATIC DIAGRAM

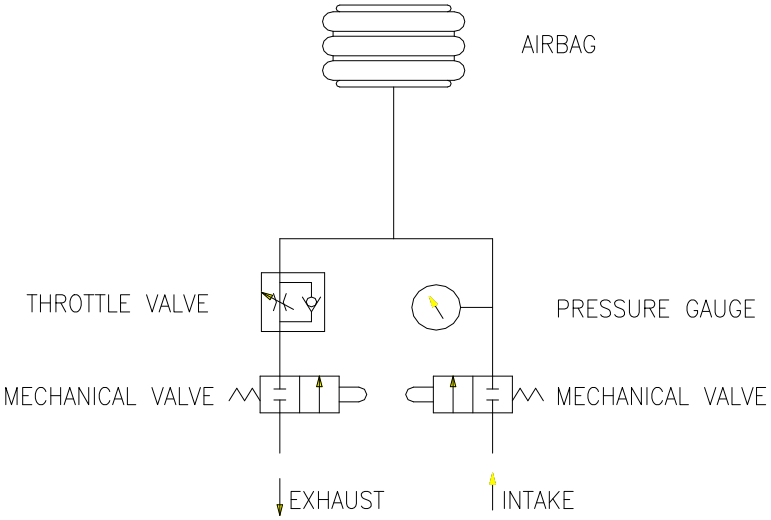

## 7. SERVICE INSTRUCTIONS

■ Do routine check of fasteners, packing and Gas system leaking.

■ Do routine check of the function of the lift table.

■ Before service the lift table, make sure the scissors mechanism is blocked.

■ After service it is necessary to check the function of the lift table again.

■ ONLY a qualified personnel can do service work.

■ Appropriate lubrication is necessary to make the lift table work easily and have a prolonged service life.

■ Following table is recommended to service the lift table periodically.

| Content | After every 500 hours' working or every 3 months later | After every 2000 hours' working or every year |
|---|---|---|
| Fasten all the connecting parts | ☆ | |
| Check airbag | ☆ | |
| Fix main parts tightly again | ☆ | |
| Check whole working state of the lift table | ☆ | |
| Lubricate all the joints and pivot points | ☆ | |
| Check wear and tear of all axial bushes | | ☆ |
| Check whether the system is leaking gas | ☆ | |
| *Remark: ☆stands for procceding the item* | | |

## 8. GREASING POINTS

1. Lower running wheel
2. Arm center
3. Upper running wheel
4. Upper arm fixing
5. Lower arm fixing
6. Shaft for pedal

**When greasing ， the Lift Table must not be loaded！**

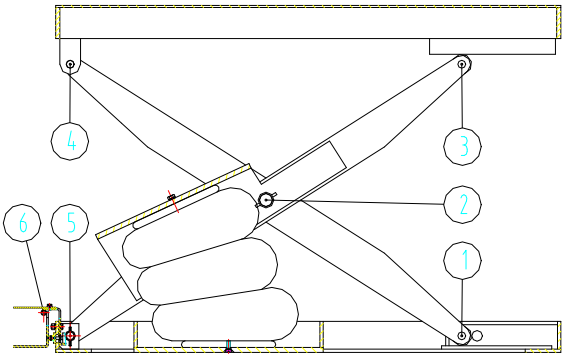

## 9. TROUBLE SHOOTING

Note: Before service it is necessary to blocked the scissor lest the table lowers accidentally.

| Trouble | Cause | Remedy |
|---|---|---|
| Table cannot lift | ◇ Intake valve did not open<br>◇ Exhaust valve did not close<br>◇ Gas pressure not enough<br>◇ The table is overloaded<br>◇ Intake road is blocked<br>◇ Intake valve dysfunctions<br>◇ Pipeline system leak<br>◇ Airbag damaged | ◇ Open the Intake valve<br>◇ Close the exhaust valve<br>◇ Increasing gas pressure<br>◇ Remove excessive load<br>◇ Pipeline cleaning<br>◇ Replace intake valve<br>◇ Check pipeline system<br>◇ Replace airbag |
| Table cannot lower | ◇ Bumper has not been removed<br>◇ Exhaust valve did not open<br>◇ Exhaust road is blocked<br>◇ Exhaust valve dysfunctions | ◇ Remove bumper.<br>◇ Open the exhaust valve<br>◇ Pipeline cleaning<br>◇ Replace exhaust valve |
| Table automatically decline | ◇ Pipeline system leak<br>◇ Airbag damaged | ◇ Check pipeline system<br>◇ Replace airbag |
| Table cannot reach the highest position | ◇ Gas pressure not enough<br>◇ Bumper has not been removed | ◇ Increasing gas pressure<br>◇ Remove bumper |

## 10. SPECIFICATIONS

| Model | QN500 | QN1000 |
|---|---|---|
| Capacity (Kg) | 500 | 1000 |
| Collapsed Height (mm) | 230 | 230 |
| Max. Bearing Height (mm) | 840 | 840 |
| Platform Length (mm) | 1220 | 1220 |
| Platform Width (mm) | 812 | 812 |
| Rated pressure （MPa） | 0.7 | 0.7 |
| Net Weight (Kg) | 147 | 263 |

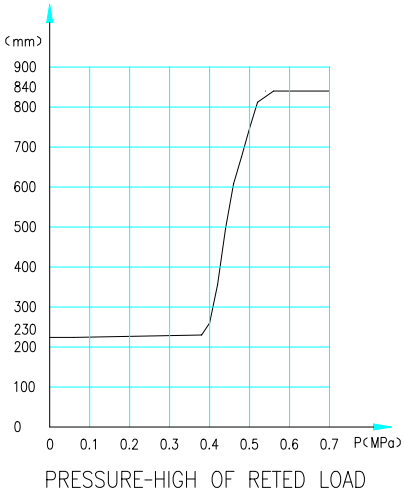

PRESSURE-HIGH OF RETED LOAD

常州市祥瑞液压设备有限公司
CHANGZHOU XIANGRUI HYDRAULIC EQUIPMENT CO.,LTD.