Instruction Manual

Single Pole Electric Elevator

Type: ET100 ET100A ET150

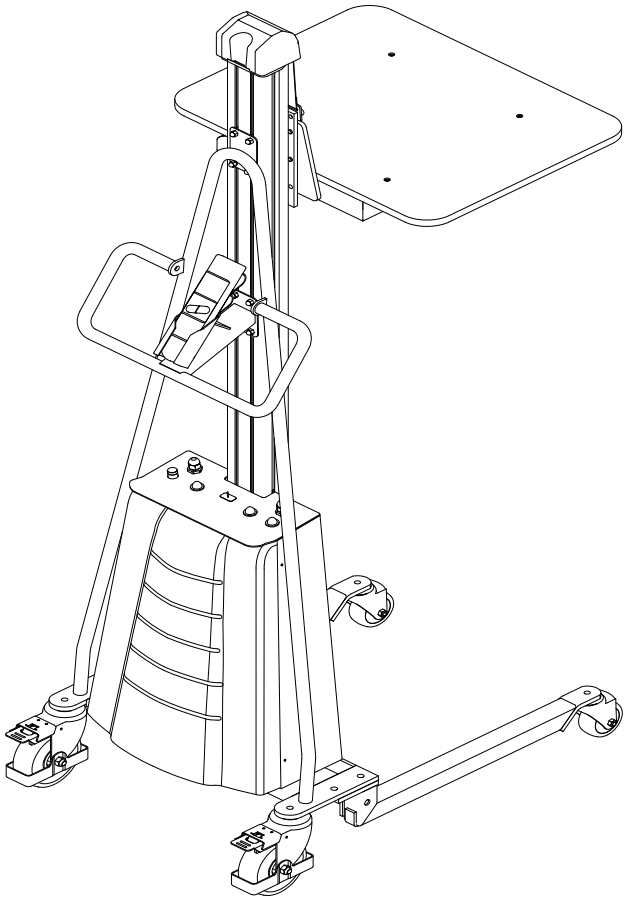

Note:

The Owner/Operator must read carefully and understand all the information presented here before operation

RevB:01/2023

Content

A. Dimensions & Parameter Chart

B. Part Name

C. Warnings

D. Check Before Assembly

E. Operation Guide

F. Daily Maintenance & Periodic Inspection

G. Trouble Shooting

H. Explosive Graphics & Chart of Parts

I. Option Attachments

Thank you for your using this series of elevators.

This manual describes right operation method for ensuring safety and the right ways of maintenance, which prolongs the working life of the equipment. The operator must read carefully and understand all the information presented here.

This series of electric elevators are easy to handle with, safe and reliable, automatic and labor saving by small but high efficient and maintenance free battery power supplying, reliable small motorized chain driving, high performance panel control; movable electric push buttons control the movements of platform or other accessory upward or downward.

This series of electric elevators are mainly used for goods transition, elevation or piling, or taking off and transiting goods at some certain height on plain and smooth floor. The characteristics of pretty appearance, high intensity aluminum alloy pole, convenient and movable electric control, automatic and labor saving make the elevators be extensively used in various kinds of factories, hospitals, marketplaces, warehouses and etc. Especially, the configuration of several accessories and provision grade platform make the elevators be specially applied in transition of small column shaped working pieces, such as in packing material printing factories, super-markets, hotels and etc.

A. Dimensions & Parameter Chart

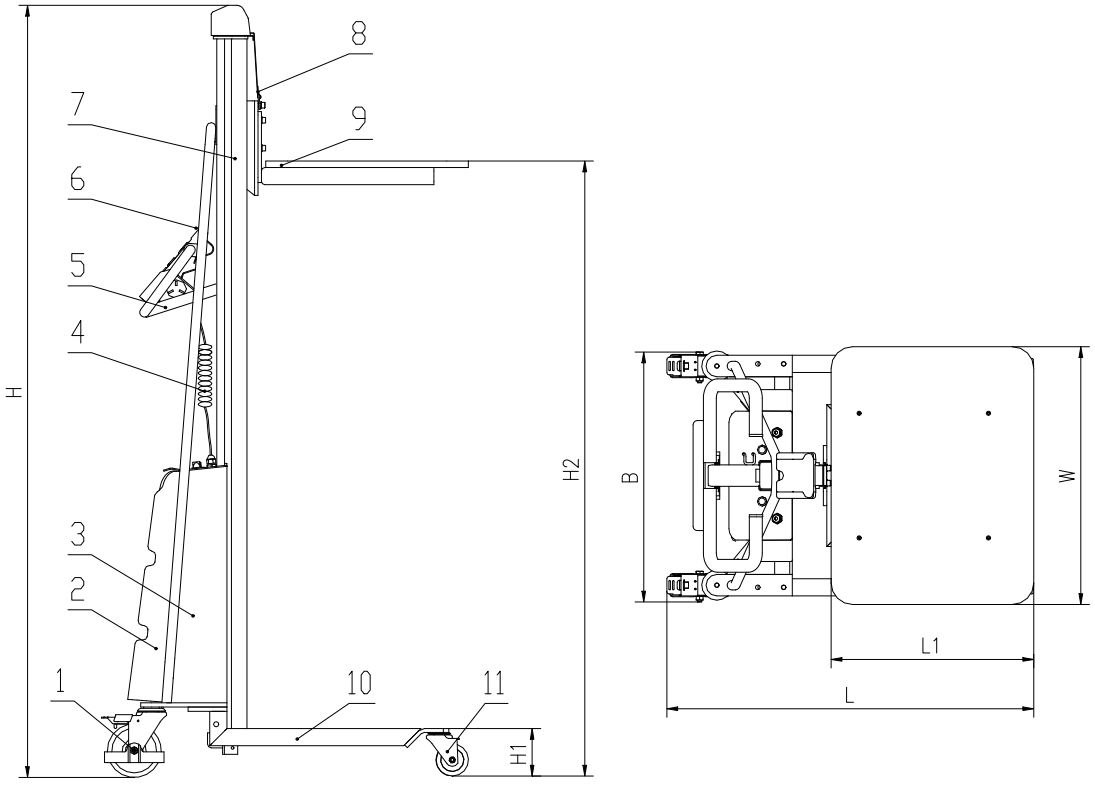

Type	ET100	ET100A	ET150
Load Capacity (Kg)	100	100	150
Load Center C (mm)	235	235	235
Height min. H1 (mm)	130	130	130
Height max. H2 (mm)	1700	2000	1500
Platform Size L1×W (mm)	470×600	470×600	470×600
Dimension L×W×H (mm)	855×600×2000	855×600×2300	855×600×1800
Front Wheel d (mm)	Φ75	Φ75	Φ75
Rear Wheel D (mm)	Φ125	Φ125	Φ125
Maintenance Free Battery	24V/12Ah		
Weight (Kg)	70	72	68

B. Part Name

1. Rear Wheel
2. Cover
3. Electric Control of Transmission Box
4. Socket for Charger
5. Handrails
6. Up-Down Switch
7. Aluminum Alloy Pole
8. Safety Belt
9. Platform (various accessories)
10. Chassis
11. Front Wheel

C. Warnings

1. Use only on plain and smooth floor.
2. Not to overload, ensure load uniformity. Pay special attention when heavily loaded. Buzzer beeps to alarm 0.5s/time, it's overload.
3. Buzzer beeps to alarm battery low, charge in time or the battery shall be damaged. Buzzer beeps to alarm 2s/time, it's low power.
4. Ensure that the input voltage of the charger complies with local power net voltage.
5. Not to contact chain or other moving parts.
6. Not to carry out long hours of continuous work under heavy duty, lest troubles from over heated of motor and panel.
7. The working life of the elevator shall be greatly prolonged when working under 0.7 times of the maximum nominal load.
8. Keep the electric control commission box closed before operation.

D. Check Before Assembly

ET Series of single pole electric elevator is delivered in box with dis-assembled

parts, and before exit factory, the product is adjusted. Please follow the following regulations to assemble and inspect the product before putting into use.

1. Ensure the parts received are complete, in good condition and appearance free from any damage.
2. Connect fast two pieces of front wheel forks (59) by bolts (56)(57) and (60) (57) (58) to the supports of electric box (4) separately.
3. Connect fast the fixed fork (68) by bolt (34) (33) to safety belt (32), downward/upward bearing seat (48) separately, without loosening and ensure the safety belt is totally clamped firmly.
4. Switch (6) power ON without load, (Buzzer may beep, switch off/on again, beep stops.); operate the hand panel (12)， platform (66) climbs smoothly up to the height maximum, keeps still, and then descends to the lowest position. The total commission makes no abnormal sound.
5. Repeat the afore mentioned operation under rated load, the platform shall climb smoothly to the height maximum, stop without slipping, or descend smoothly to the lowest position and stop then without abnormal sound.
6. The maintenance-free battery, which is provided together with the elevator, has been initially charged full before exit plant. Provided the interval from exit plant is relatively long, the battery may be no more full. Hence, for the first time heavy load climbing when buzzer beeps 2s/time, it is necessary to charge again before re-use.

E. Operation Guide

1. Elevator: Operation of Transition, Loading and unloading

1.1. Lock truckles before goods loading and unloading at any height.

1.2. Take care of load uniformity when load and unload; deflected load is always not appreciated.

1.3. Mention not to loose equilibrium from one-sided unloading lest dangerous occurrences.

1.4. When it is needed to move the elevator with unfinished unloading, take care of the uniformity of the goods still needed to be unloaded.

1.5. Lower the platform to the lowest position when the loaded elevator is to move, so as to ensure safety.

2. Elevator: Operation of Climbing and Descending

2.1. Take care to stop at a right spot and ensure needed operation space when the elevator is to pile or take off goods for some height.

2.2. Lock the wheels, and switch power on.

2.3. Press on the UP button on the panel, the platform climbs smoothly to the needed height, and then release the button, the platform keeps still and shall no slip down. The movable hand control panel is convenient for the operator to observe and operate on different positions.

2.4. Strictly follow the regulations (1.1、1.3、1.4)to operate the elevator when goods raised up to the needed height for unloading or piling.

2.5. Strictly follow the regulations (1.1、1.2、1.5)to operate the elevator when taking off goods from racket.

2.6. When finishing unloading at some height, press the DOWN button for the platform descending smoothly; and the Down button can be released at any height needed while the platform shall stop descending for the elevator to perform a new job at same spot but different height.

2.7. The elevator is designed to possess the function of overload protection. Whenever the load surpasses 25% of rated capacity, the platform shall not be elevated, the elevator shall not be able to carry out the jobs of up-climbing, down-descending and vehicle transition.

2.8. The elevator is designed to possess the function of low power protection. Should the battery power is not sufficient for jobs during loaded climbing and descending, Buzzer beeps to alarm 2s/time and operator shall lower the platform to the lowest position during this period; the elevator is protected and the operation of climbing is invalid even if the power is still connected.

3. Battery

3.1. High performance petty maintenance-free sealed acidic-lead storage battery is selected to power the elevator. It is characterized by low discharge ability, safe, easy mounting and change-over, and can be used under the ambient temperature range of -15ºC--50ºC.

3.2. The working life of the battery is greatly depends on the right use. The working life of the battery shall be greatly shortened when repeatedly used at the condition of low voltage, and even burn the control element. Considering of this, the elevator is designed with the function of low voltage protection in the part of electric control. During the elevator is operating under low voltage for up-climbing or down-descending, Buzzer beeps to alarm 2s/time. The operator shall charge the battery in time.

4. Charger

4.1. High performance charger is provided together with the elevator, so that the battery can be charges at any handy power terminal. Be sure the voltage of local power net is as needed by the inlet voltage of the charger.

4.2. When charging with switch off elevator power, connect charger source pin and power terminal socket, the red indicator of source power of the charger is lit up, that means the battery is in the status of charging; and when the red indicator faded, the green indicator of source power of the charger is lit up,that means the battery is charged full. Generally, the charging period takes 8-10 hours.

4.3. Shall the charged battery shows low voltage status during heavy duty job,

probably the battery is damaged or the charger is in trouble.

5. Safety Belt

5.1. Safety belt is a safety device provided for preventing the transmission chain to break suddenly and that may cause equipment damaging. The device makes the elevator possess the characteristics of safe and reliable.

F. Daily Maintenance & Periodic Inspection

1. Check if right every day for each status indication, including the smoothness and stability of platform up-climbing and down-descending.
2. Check once a month if any deformation, connection loosening, wearing and abnormal sound for connecting bolts, wheels, rolling bearings, transmission chain, structure parts and moving parts.
3. Check once a month the jiggling, wearing, lubricating, and loosening for chain, sprocket wheel, chain-trolley and connecting bolts inner transmission box, grease in time, as well.
4. Once each three months check control panel, charger, battery and electric control wiring if any loosening inner transmission box and the inner box cleaning.
5. Check each month the bending and deforming status of the pole, and if the flexible and smooth for the safety belt protruding and retrieving.

G. Trouble Shooting

SN	Description	Cause	Treatment
1	Power on, press UP button, platform not climbing up	1.Power switch damage	Check and changeover
		2.Wire off	Check and connect
		3.Battery dead or damaged	Charge of change
		4.Button fail or wire off	Check and changeover
		5.Panel fuse burnt	Changeover
		6.Motor damaged	Check or changeover
		7.Overload	Partial unloading
		8.Lowest position traveling switch fail	Check or changeover
		9. Battery low or over discharged	Charge in time
2	Press UP button, climbing slowly or not climbing up	1.Motor trouble, RPM lowered	Check or changeover
		2.Panel adjustment fail	Re-adjust panel
3	Platform cannot climb to the height max.	1.Barrier inner guiding rail	Clear away barrier and lubricating
4	Platform climbed to the height max but fail to descending	1.DOWN button fail	Check or changeover
		2.Travelling switch inner panel fail	Check or changeover
		3.Panel damage	Check or changeover
		4.Safety belt fail, not working	Check or changeover

5	Safety belt fails to protruding or retrieving.	1.Ratchet structure of the device retrieving fail	Check or changeover
		2.Wrest spring inner device damage	Check or changeover
6	Battery charged, platform climbing slowly or cannot climbing up	1.Insufficient charging	Re-charge
		2.Battery damage	Change new battery
		3.Charger fail	Check or changeover the charger
7	Obvious low voltage but buzzer not to beep	1.Wire off or buzzer fail	Check or changeover
		2.Buzzer circuit damage	Check or changeover
8	Abnormal sound from platform up/down transmission	1.Chain elongated	Adjust to proper
		2.Sprocket loosening or shift	Check, adjust or fix
		3.Sprocket wheel damage	Check or changeover
		4.Other commissioning part worn out, deformation	Check or changeover

Diagram of Electric Control

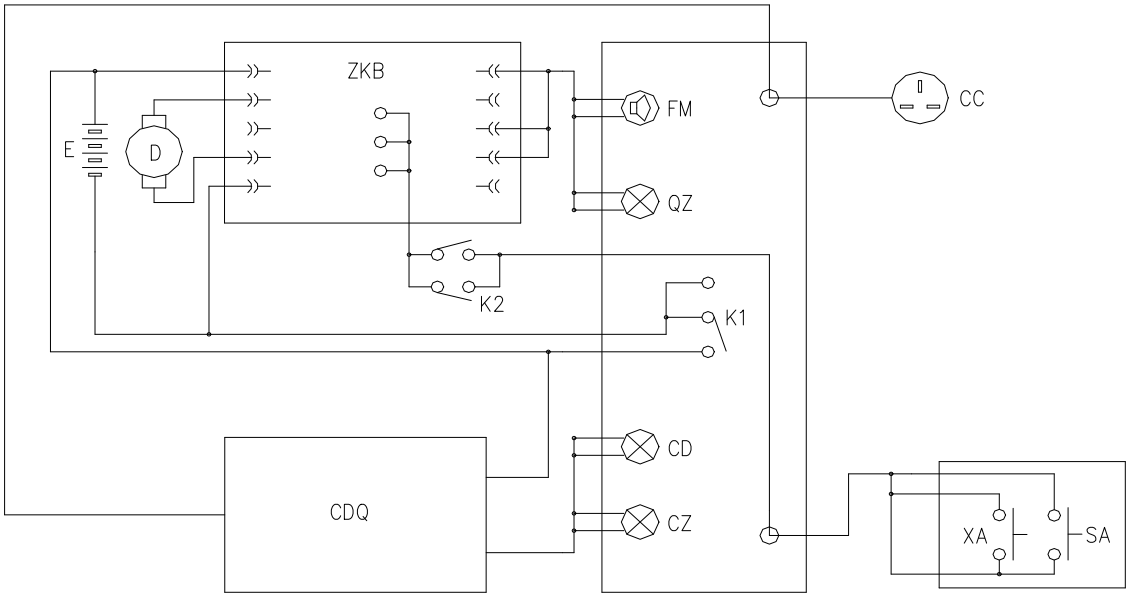

E	24VDC Supply	D	DC Motor
CC	Socket of Charger	FM	Buzzer
QZ	Cut-off Indicator	CD	Charger Supply
CZ	Charging Status	SA	UP button
XA	DOWN button	K1	Power Supply Switch
K2	Up/Down limit switch	ZKB	Main Control Circuit Board
CDQ	Charger		

Sketch Map of Electric Panel

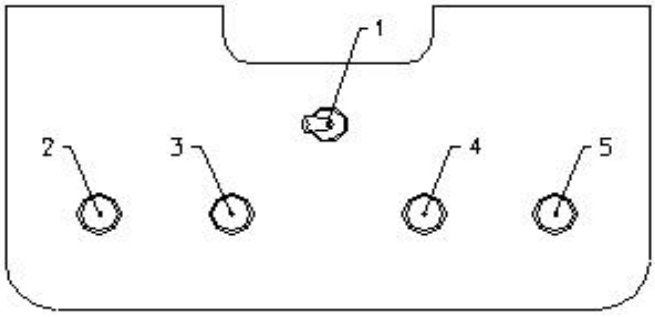

1	Power Switch	2	Buzzer
3	Power Indicator	4	Charger power supply
5	Charging Status		

常州市祥瑞液压设备有限公司
CHANGZHOU XIANGRUI HYDRAULIC EQUIPMENT CO.,LTD.