Instruction Manual

BSW51 BSW76 BSW101
BSW31D BSW51D BSW81D



NOTE: Owner/Operator must read and understand this instruction manual before using the lift table.

Lift Table BSW Series

BSW51 BSW76 BSW101 BSW31D BSW51D BSW81D

Operation and Service Manual

BEFORE OPERATING THE LIFT TABLE, READ THIS MANUAL CAREFULLY AND UNDERSTAND COMPLETELY. KEEP THIS MANUAL ON FILE FOR FUTURE REFERENCE. IF THIS IS LOST, PLEASE CONTACT YOUR LOCAL SUPPLIER FOR A NEW COPY. ALSO, IF THE WARNING/CAUTION DECAL ON THE UNIT IS LOST, PLEASE CONTACT YOUR LOCAL SUPPLIER FOR A NEW DECAL.

NOTE: On this manual, WARNING means the danger which can lead to death or serious injury. CAUTION means the danger which can lead to slight injury or property damage.

1. WARNING

1.DO NOT put foot or hand in scissors mechanism.

2.DO NOT allow other person to stand in front of or behind lift table when it is moving.

3.DO NOT move lift table when table is in raised position. Load could fall down.

4.DO NOT enter under table.

5.DO NOT overload lift table.

6.DO NOT put foot in front of rolling wheels. Injury could result.

7.WATCH difference and hardness of floor level when moving lift table. Load could fall down.

8.DO NOT use lift table on slope or inclined surface, lift table may become uncontrollable and create danger.

9.DO NOT lift people. People could fall down and suffer severe injury.

2. CAUTION

1.Read this operation manual carefully and understand completely operating lift table. Improper operation could create danger.

2.This lift table is a movable lifter designed to lift or lower rated load on table. NO NOT use lift table for other purpose than its intended use.

3.DO NOT allow person to operate lift table who does not understand its operation.

4.DO NOT lower table too fast. Load could fall down and create danger.

5.KEEP watching the condition of load. Stop operating lift table if load becomes unstable.

6.DO NOT side or end load. Load must be distributed on at least 80% of table area.

7.DO NOT use lift table with unstable, unbalanced loosely stacked load.

8.Practice maintenance work according to service instructions.

9. DO NOT modify lift table without manufacturers written consent.

10. REMOVE load from table and use safety stopper to prevent table from lowering when servicing lift table.

11. This lift table is not designed to be water resistant. Use lift table under dry condition.

3. DAILY INSPECTION

Daily inspection is effective to find the malfunction or fault on lift table. Check lift table on the following points before operation.

CAUTION

DO NOT use lift table if any malfunction or fault is found.

(1) Check for scratch, bending or cracking on the lift table.

(2) Check if there is any oil leakage from the cylinder.

(3) Check the vertical creep of the table.

(4) Check the smooth movement of the wheel.

(5) Check the function of brake.

(6) Check if all the bolt and nuts are tightened firmly.

4. OPERATING LIFTTABLE

4-1. How to use the brake.

CAUTION
Brake lift table when not moving it in order to prevent sudden movement.

The brake is equipped with the swivel caster on the right side.

(1) Braking the wheel, press the brake pedal.

(2) Releasing the brake, lift up the brake pedal.

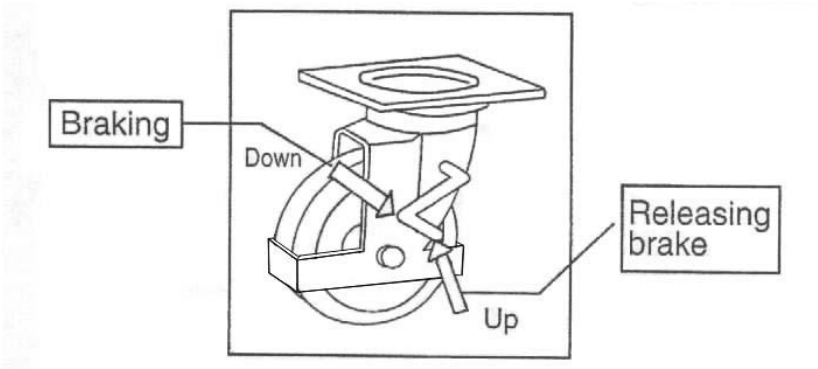

4-2 Lifting the table

WARNING
1. DO NOT overload lift table, stay within its rated capacity. 2. DO NOT side end load must be distributed on at least 80% of table area.

Press the lifting pedal several times the until the table reaches the desired position.

The table does not elevate after reaching the highest position even if the lifting pedal is pressed.

The table lowers slightly after reaching the highest position.

BSW series
NOTE: The hydraulic cylinder is designed to hold table. As is the nature of the hydraulic system, table lowers very slowly over and extended period of time, Please note the table does not stay at the same position indefinitely.

4-3. Lowering table

WARNING
DO NOT put foot or hand in scissors mechanism.

Pull the lowering down and table lowers.

5. Specifications

Model	Capacity (kg)	Table (mm)	Table height(mm) H ~ H1	Stroke （mm）	L×W×H (mm)	Pedal to top. (approx.times)	Wheel （㎜）Φ	Weight (kg)
BSW51	500	1010x520	455-1025	570	1190x520x1130	48-55	150	146
BSW76	750	1010x520	457-1025	568	1260x520x1130	55-65	150	148
BSW101	1000	1010x520	465-985	520	1260x520x1130	80-85	150	165
BSW31D	300	1010x520	460-1610	1150	1260x520x1130	58-65	150	178
BSW51D	500	1010x520	460-1610	1150	1260x520x1130	78-85	150	196
BSW81D	800	1010x520	515-1425	910	1260x520x1130	88-95	150	193

Weighing Accuracy:
When table height is between H~ (H+ 40%Stroke) : accuracy is ±0.1%
When table height is more than (H+ 40%Stroke) : accuracy is ±0.2%
Suggestion: make the table at the lowest height for weighing

6. Service instruction

6.1. Lubricate each point described below every month:
6.2.Change hydraulic oil every 12 months.
Lubricating Points
(1) Fitting of cylinder……Oil
(2) Roller friction surface……Grease
(3) Link Pin ……Oil
(4) Pedal fitting point……Oil
(5) Link center pin……Oil
(6) Joint……Grease
(7) Grease nipple……Grease
(8) Hydraulic circuit

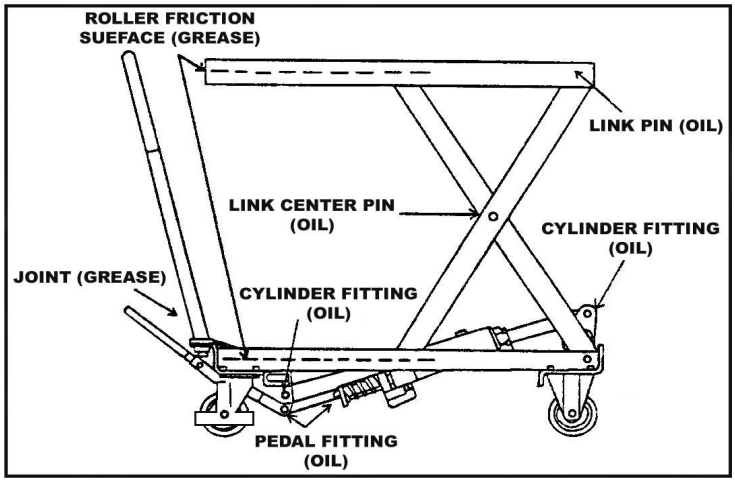

7. Hydraulic Circuit

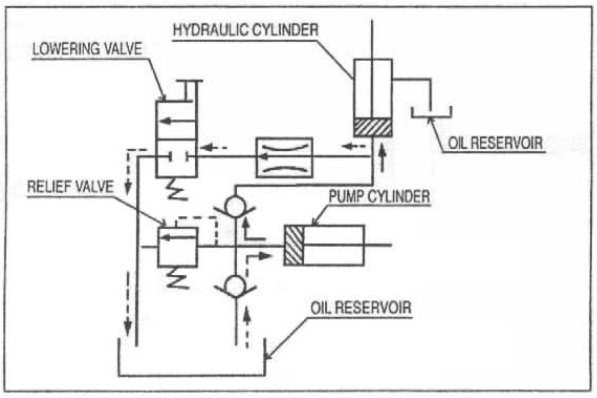

LIFTING
LOWERING
SUCTION

常州市祥瑞液压设备有限公司
CHANGZHOU XIANGRUI HYDRAULIC EQUIPMENT CO.,LTD.