Instruction Manual

ELECTRIC LIFT TABLE

Model:BS50LD BS100LD

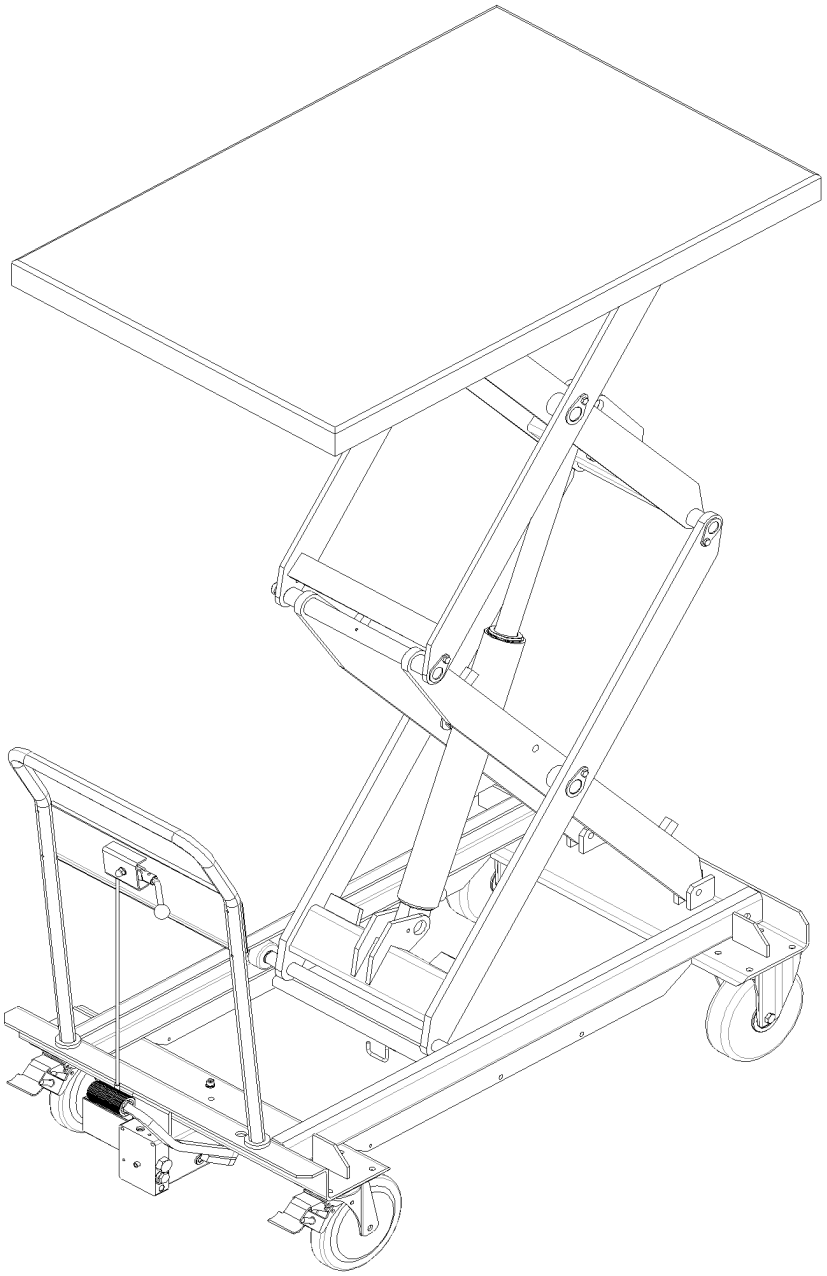

Note: Owner/Operator must read and understand this instruction Manual before using the lift & tilt table.

Lift Table BS Series

BS50LD , BS100LD

Operation and Service Manual

BEFORE OPERATION THE LIFT TABLE, READ THIS MANUAL CAREFULLY AND UNDERSTAND CONTACT. KEEP THIS MANUAL ON FILE FOR FUTURE REFERENCE. IF THIS IS LOST, PLEASE CONTACT YOUR LOCAL SUPPLIER FOR A NEW COPY. ALSO, IF THE WARNING/CAUTION DECAL ON THE UNIT IS LOST, PLEASE CONTACT YOUR LOCAL SUPPLIER FOR A NEW DECAL.

Note: On this manual, WARNING means the danger, which can lead death or serious injury. CAUTION means the danger, which can lead slight injury or property damage.

1. WARNINGS

1. DO NOT puf foot or hand in scissore machanism.
2. DO NOT allow other person to stand in front of or behind lift table when it is moving.
3. DO NOT move lift table when table is in raised position . load could fall down.
4. DO NOT enter under table.
5. DO NOT overload lift table.
6. DO NOT put foot in front of rolling wheels . injury could result.
7. WATCH difference of floor level when movinglift table. Load could fall down.
8. DO NOT use lift table on slope pr inclined surface , lift table may become uncontrolable and create danger.
9. DO NOT lift people. People could fal l down and suffer severe injury.

2. CAUTIONS

1. Read this operation manual carefully and understand completely operating lift table. Improper operation could create danger.
2. This lift table is a movable lifter designed to lift ro lower rated load on table. DO NOT use the lift table for any other purpose than its intended use.
3. DO NOT allow person to operate lift table who dose not understand its operation.
4. DO NOT lower table too fast. Load could fall down and create danger.
5. KEEP watching the condition of load. Stop operating lift table if load becomes unstable.
6. Break the lift table when sliding load on or off table.
7. DO NOT side or end load. Load must be distributed on at least 80% of table area.
8. DO NOT use.
9. Practice maintenance work according to service instructions.
10. DO NOT modify lift table without manufactureris .
11. REMOVE load from table and use safety stoper to prevent table feom lowering when servicing lift table.
12. This lift table is not designed to be water resistant. Use lift table under dry condition.

3. DAILY INSPECTION

Daily inspection is effective to find the malfunction or fault on lift table. Check lift table on the following points before operation.

CAUTION
DO NOT use lift table if any malfunction or fault is found.

(1) Check for scratch, bending or cracking on the lift table.
(2) Check if there is any oil leakage from the cylinder.
(3) Check the vertical creep of the table.
(4) Check the smooth movement of the wheels.
(5) Check the function of brake.
(6) Check if all the bolts and nuts are tightened firmly.

4. NAME OF PARTS BS50LD BS100LD

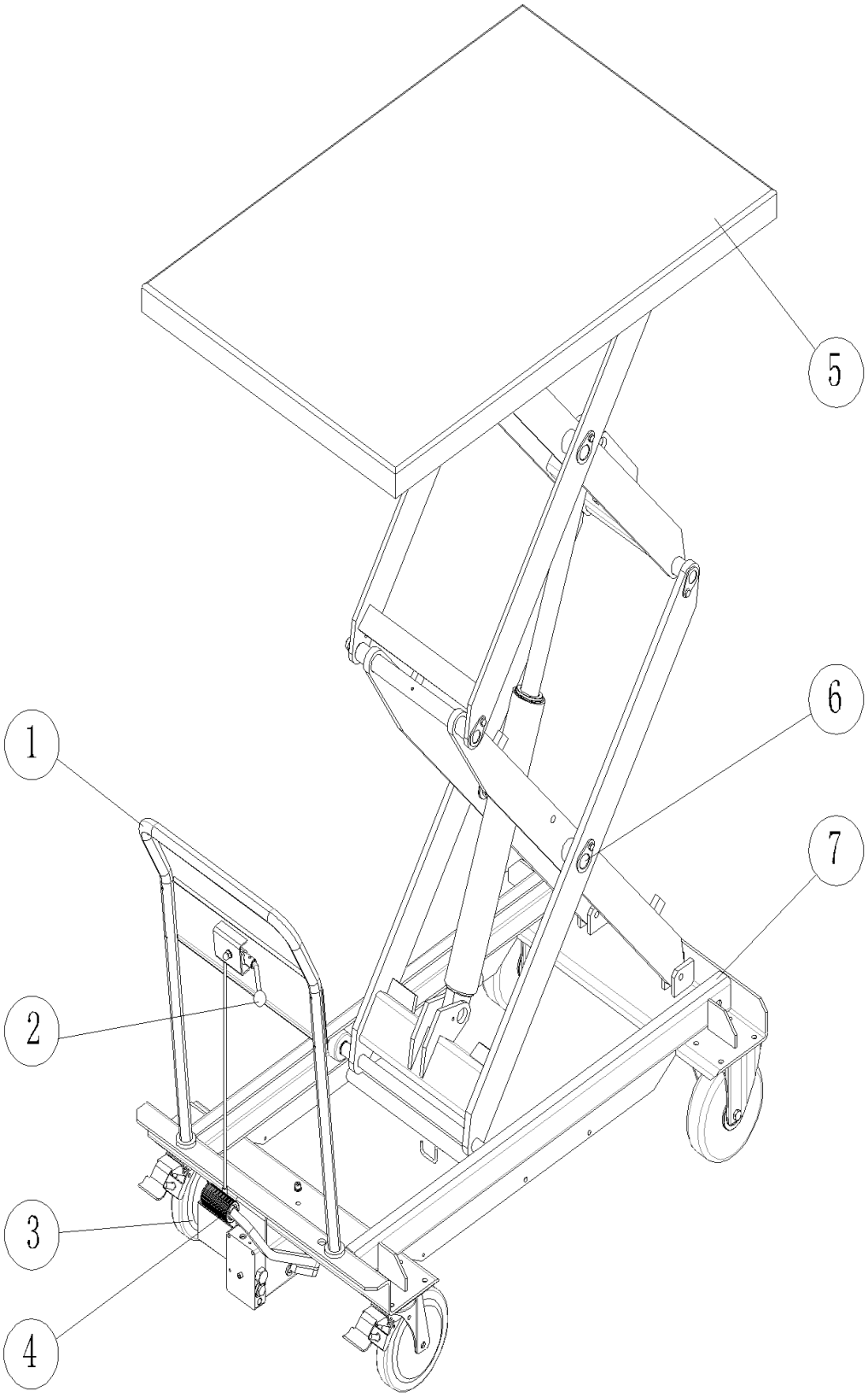

1.Handle	3.Brake Pedal	5.Platform	7.Guide rail
2.Switch	4.Lifting Pedal	6. Link	

5. OPERATING LIFT TABLE

5-1. How to use the brake.

CAUTION
Brake lift table when not moving it in order to prevent sudden movement.

The brake is equipped with the swivel caster on the right side.

(1) Braking the wheel, press the brake pedal.

(2) Releasing the brake, lift up the brake pedal.

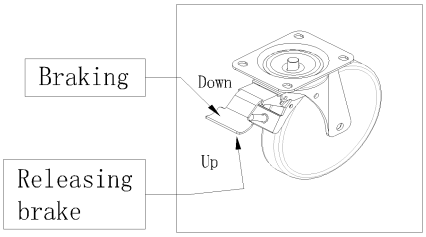

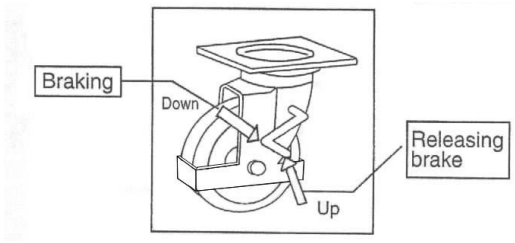

5-2. Lifting the table

WARNING
DO NOT overload lift table, stay within its rated capacity. DO NOT side or end load load must be distributed on at least 80% of table area.

Press the lifting pedal several times until the table reaches the desired position.

The table does not elevate after reaching the highest position even if the lifting pedal is pressed.

The table lowers slightly after reaching the highest position.

MAXIMUM CAPACITY OF TABLE	
BS50LD	**BS100LD**
500kg	**1000kg**

NOTE:
The hydraulic cylinder is designed to hold table. As is the nature of the hydraulic system, table lowers very slowly over and extended period of time. Please note the table does not stay at the same position indefinitely.

5-3. Lowering table

WARNING
DO NOT put foot or hand in scissors mechanism.

Pull the lowering lever up and table lowers.

6.SPECIFICATIONS

Model		BS50LD	BS100LD
Capacity	(Kg)	500	1000
Table Size	(mm)	1200×800	1200×800
Max. Fork Height	(mm)	2000	2000
Min. Fork Height	(mm)	470	520
Handle Height	(mm)	1030	1080
Ground Clearance	(mm)	68.5	125
Wheel Dia.	(mm)	∮160	∮200
Lowering Time	(sec)	22	44
Foot Peda		179	255
Overall Size	(mm)	1430×800	1430×800
Net Weight	(Kg)	222	242

7.Service Instructions

7-1. Lubricate each point described below every month:

7-2. Change hydraulic oil every 12 months.

Lubricating Points

(1). Fitting of cylinder·····Oil

(2). Roller friction surface·····Grease

(3). Connecting rod bolt·····Oil

(4). Pedal fitting point·····Oil

(5). Link center pin·····Oil

(6). Joint·····Grease

(7). Grease nipple·····Grease

(8). Hydraulic ciscuit·····Grease

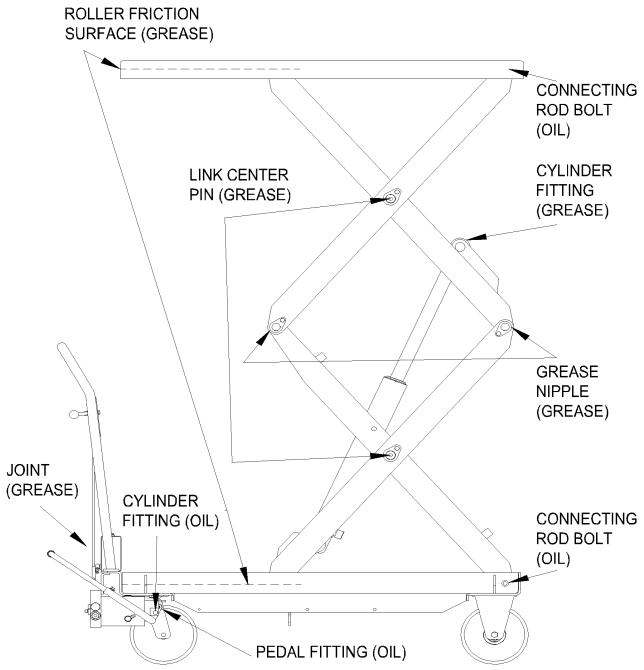

8.Hydraulic Circuit

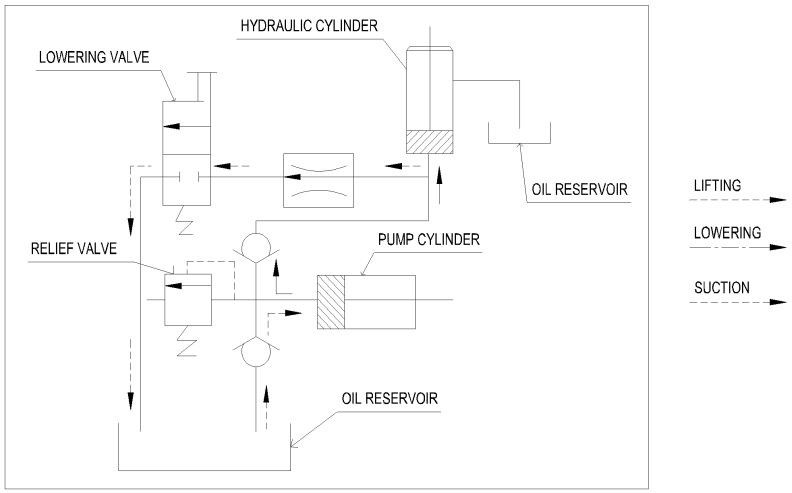

常州市祥瑞液压设备有限公司
CHANGZHOU XIANGRUI HYDRAULIC EQUIPMENT CO.,LTD.