Instruction Manual

FS Series



NOTE: Owner/Operator must read and understand this instruction manual before using the lift table.

RevB: 01/2025

Operation and Service Manual

BEFORE OPERATING THE LIFT TABLE, READ THIS MANUAL CAREFULLY AND UNDERSTAND COMPLETELY. KEEP THIS MANUAL ON FILE FOR FUTURE REFERENCE. IF THIS IS LOST, PLEASE CONTACT YOUR LOCAL SUPPLIER FOR A NEW COPY. ALSO, IF THE WARNING/CAUTION DECAL ON THE UNIT IS LOST, PLEASE CONTACT YOUR LOCAL SUPPLIER FOR A NEW DECAL.

NOTE: On this manual, WARNING means the danger which can lead to death or serious injury. CAUTION means the danger which can lead to slight injury or property damage.

1. WARNING

1.DO NOT put foot or hand in scissors mechanism.

2.DO NOT allow other person to stand in front of or behind lift table when it is moving.

3.DO NOT move lift table when table is in raised position. Load could fall down.

4.DO NOT enter under table.

5.DO NOT overload lift table.

6.DO NOT put foot in front of rolling wheels. Injury could result.

7.WATCH difference and hardness of floor level when moving lift table. Load could fall down.

8.DO NOT use lift table on slope or inclined surface, lift table may become uncontrollable and create danger.

9.DO NOT lift people. People could fall down and suffer severe injury.

2. CAUTION

1.Read this operation manual carefully and understand completely operating lift table. Improper operation could create danger.

2.This lift table is a movable lifter designed to lift or lower rated load on table. NO NOT use lift table for other purpose than its intended use.

3.DO NOT allow person to operate lift table who does not understand its operation.

4.DO NOT lower table too fast. Load could fall down and create danger.

5.KEEP watching the condition of load. Stop operating lift table if load becomes unstable.

6.Byake lift table when sliding load on of off table.

7.DO NOT side or end load. Load must be distributed on at least 80%of table area.

8.DO NOT use lift table with unstable, unbalanced loosely stacked load.

9.Practice maintenance work according to service instructions.

10. DO NOT modify lift table without manufacturer’s written consent.

11. REMOVE load from table and use safety stopper to prevent table from lowering when servicing lift table.

12. This lift table is not designed to be water resistant. Use lift table under dry condition.

3. DAILY INSPECTION

Daily inspection is effective to find the malfunction or fault on lift table. Check lift table on the following points before operation.

CAUTION

DO NOT use lift table if any malfunction or fault is found.

(1) Check for scratch, bending or cracking on the lift table.

(2) Check if there is any oil leakage from the cylinder.

(3) Check the vertical creep of the table.

(4) Check the smooth movement of the wheel.

(5) Check the function of brake.

(6) Check if all the bolt and nuts are tightened firmly.

4. OPERATING LIFTTABLE

4-1. How to use the brake.

CAUTION
Brake lift table when not moving it in order to prevent sudden movement.

The brake is equipped with the swivel caster on the right side.

(1) Braking the wheel, press the brake pedal.

(2) Releasing the brake, lift up the brake pedal.

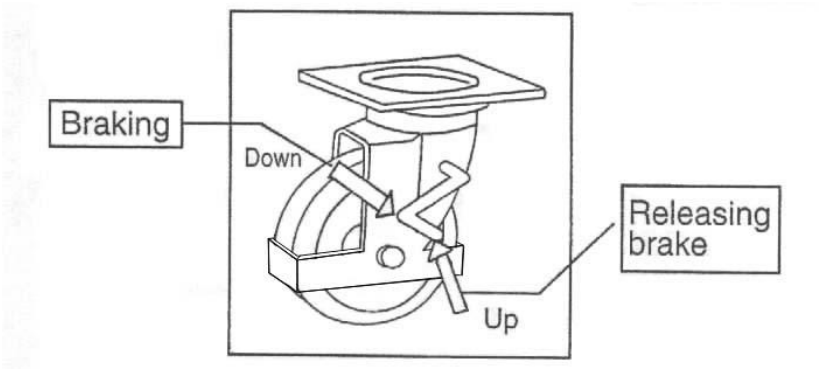

4-2 Lifting the table

WARNING
1. DO NOT overload lift table, stay within its rated capacity. 2. DO NOT side end load must be distributed on at least 80% of table area.

Press the lifting pedal several times the until the table reaches the desired position.

The table does not elevate after reaching the highest position even if the lifting pedal is pressed.

The table lowers slightly after reaching the highest position.

FS20	**FS36**	**FS45**	**FS46**	**FS68**	**FS91**
200KG	**360KG**	**450KG**	**460KG**	**680KG**	**910Kg**

NOTE: The hydraulic cylinder is designed to hold table. As is the nature of the hydraulic system, table lowers very slowly over and extended period of time, Please note the table does not stay at the same position

ionindefiinitely.

4-3. Lowering table

WARNING
DO NOT put foot or hand in scissors mechanism.

Pull the lowering down and table lowers.

5. Specifications

Model	Capacity (kg)	Table (mm)	Table Height(mm)	L×W×H (mm)	Pedal to top. (approx. times)	Wheel (mm) φ	Weight (kg)
FS20	200	700×450	260-750	1240×450×1010	18	100	48
FS36	360	920x520	410-1350	1125×520×1070	58	125	105
FS45	450	852x502	390-910	1050×570×1100	30	125	78
FS46	460	1600x800	370-1000	1822×800×1100	56	125	140
FS68	680	1220x610	470-1500	1445×610×1135	40/70	150	168
FS91	910	1010×520	442-1000	1260×540×1100	68	150	112

6. Service instruction

6.1-1. Lubricate each point described below every month:

6.2.Change hydraulic oil every 12 months.

Lubricating Points

(1) Fitting of cylinder……Oil

(2) Roller friction surface……Grease

(3) Link Pin ……Oil

(4) Pedal fitting point……Oil

(5) Link center pin……Oil

(6) Joint……Grease

(7) Grease nipple……Grease

(8) Hydraulic circuit

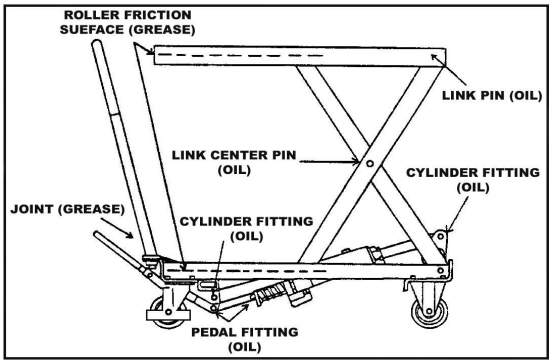

7. Hydraulic Circuit

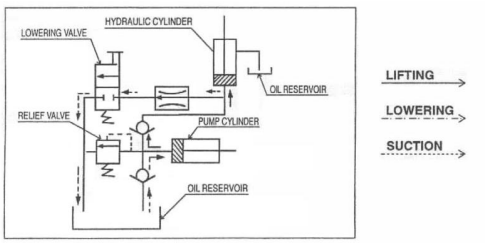

常州市祥瑞液压设备有限公司
CHANGZHOU XIANGRUI HYDRAULIC EQUIPMENT CO.,LTD.