GLOBE FLUIDO

QINGDAO FLUIDO INDUSTRIAL CO., LTD.

Export Office: 21F ,No.5 Nanhai Zhi Road,Qingdao,China
Web: www.fluidovalve.com www.eathu.com
E-mail: info@fluidovalve.com
Tel: 0086-532-88550858

FLUIDO

德标高平台法兰球阀
DIN HIGH PLATFORM
FLANGE BALL VALVE

美标低平台法兰球阀
ANSI LOW PLATFORM
FLANGE BALL VALVE

国标法兰球阀
GB FLANGE
BALL VALVE

国标硅溶胶法兰球阀
GB SILICA SOL
FLANGE BALL VALVE

高平台对夹式球阀
WAFER TYPE BALL VALVE
FLANGE END DIRECT
MOUNTING PAD

三通法兰球阀
3-WAY FLANGE
BALL VALVE

美标高平台法兰球阀
ANSI HIGH PLATFORM
FLANGE BALL VALVE

三通高平台法兰球阀
THREE-WAY HIGH PLATFORM
FLANGE BALL VALVE

气动德标法兰球阀
PNEUMATIC DIN
FLANGE BALL VALVE

气动国标法兰球阀
PNEUMATIC GB
FLANGE BALL VALVE

气动三通法兰球阀
PNEUMATIC THREE-WAY
FLANGE BALL VALVE

气动三片式快装球阀
PNEUMATIC THREE-PIECE
QUICK-FIT BALL VALVE

FLUIDO

一片式内螺纹球阀
1-PC BALL VALVE
THREAD END

二片式内螺纹球阀
2-PC BALL VALVE
THREAD END

二片式高压球阀
2-PC BALL VALVE
HIGH PRESSURE

三片式高平台球阀
3-PC BALL VALVE FLANGE
END DIRECT MOUNTNG PAD

三片式高平台快装球阀
3-PC BALL VALVE CLAMP
END DIRECT MOUNTING PAD

三片式对焊球阀
3-PC BALL VALVE BUT
WELD END

三片式法兰球阀
3-PC FLANGE BALL VALVE

三通螺纹球阀
3-WAY THREADED
BALL VALVE

三通高平台螺纹球阀
3-WAY HIGH PLATFORM
THREADED BALL VALVE

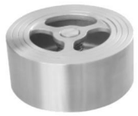

对夹式止回阀
WAFER TYPE DISC
SPRING CHECK VALVE

二片式立式止回阀
2-PC VERTICAL CHECK
VALVE THREAD END

卡压闸阀
CARD PRESSURE
GATE VALVE

Y型过滤器
Y TYPE FILTER

FLUIDO

1-PC BALL VALVE REDUCE PORT
1000WOG, PN63

PRODUCTS STANDARD
- ♦Blow-Out Proof Stem 防脱出阀杆
- ♦Investment Casting Body 精密铸造阀体
- ♦All Kinds Of Thread Available 各种标准螺纹
- ♦Locking Device Handle Available 带锁手柄选配
- ♦Reduce port 缩径
- ♦Thread Acc H 螺纹标准：ANSI B1.20.1
  BS 21, DIN 2999, ISO 7-1
- ♦Inspection & Testing Acc 检测标准：API 598
- ♦Seat:PTFE.Glass filled PTFE Carbon filled PTFE available

Pressure-Temperature
Rating 1/4"~4"

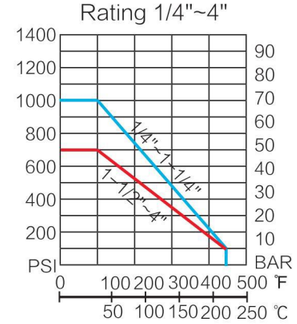

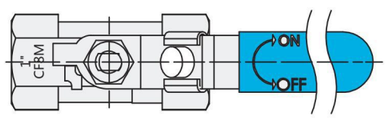

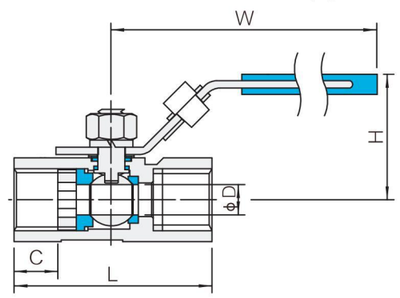

Size	φd	L	H	W	C	Torque N.M	End
1/4"	5	40	28	75	10	3	
3/8"	7	45	31	90	10.5	3	
1/2"	9	57	34	95	13.5	3	
3/4"	12	60	43	95	14	4.5	
1"	15	72	52	111	16.5	5	BSPT
1-1/4"	20	78	52	124	19	7	NPT
1-1/2"	25	89	65	139	19	8	BSPP
2"	32	102	70	152	23.5	16	...
2-1/2"	38	126	95	200	31.5	21	
3"	48	150	102	200	32	26	
4"	65	192	133	250	44	40	

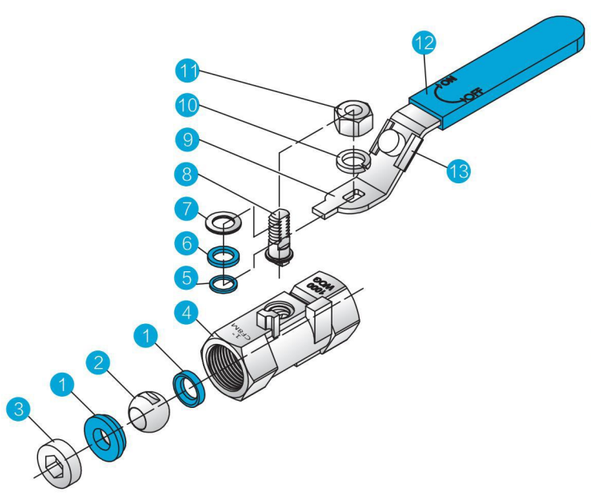

主要构件材料 Materials of Main Construction

Item No.	Part Name	Material		
1	Seat 阀座	PTFE		
2	Ball 阀球	SS316	SS304	
3	Cap Plug 压盖	CF8M	CF8	
4	Body 阀体	CF8M	CF8	WCB
5	Thrust Washer 垫圈	PTFE		
6	Stem Packing 密封圈	PTFE		
7	Gland Ring 垫圈	SS304		
8	Stem 阀杆	SS316	SS304	
9	Handle 手柄	SS201		
10	Spring Washer 弹簧垫圈	SS304		
11	Stem Nut 螺母	SS304		
12	Handle Cover 手柄皮套	PLASTIC		
13	Locking Device 锁定装置	SS201		

2-PC BALL VALVE FULL PORT
1000WOG, PN63

FLUIDO

PRODUCTS STANDARD
- ♦Blow-Out Proof Stem 防爆阀杆
- ♦Investment Casting Body 精密铸造阀体
- ♦Full Port 全通径设计
- ♦All Kinds Of Thread Available 各种螺纹标准
- ♦Locking Device Handle Available 带锁手柄选配
- ♦Thread Acc螺纹标准：ANSI B1.20.1
  BS 21, DIN 2999, ISO 7-1
- ♦Inspection & Testing Acc 检测标准：API 598
- ♦Seat:PTFE.Glass filled PTFE Carbon filled PTFE available

Pressure-Temperature
Rating 1/4"~4"

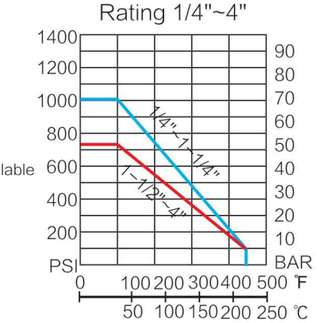

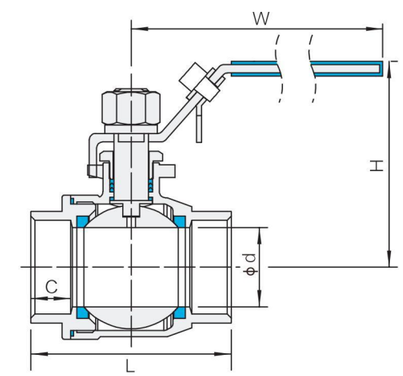

Size	φd	L	H	W	C	Torque N.M	End
1/4"	10.5	48	51.5	100	10	4	
3/8"	10.5	46	51.5	100	10	4	
1/2"	14	58	57.5	100	12.5	5	
3/4"	19	64	64.5	120	13	7	BSPP
1"	24	76	68	120	15.5	9	BSPT
1-1/4"	31	87	79.5	150	17.5	16	NPT
1-1/2"	38	96	90.5	170	18	23	PT
2"	48	114	98	170	18	26	DIN
2-1/2"	64	142	122	250	24	50	...
3"	76	164	132	250	27.5	86	
4"	98	197	163	300	28	118	

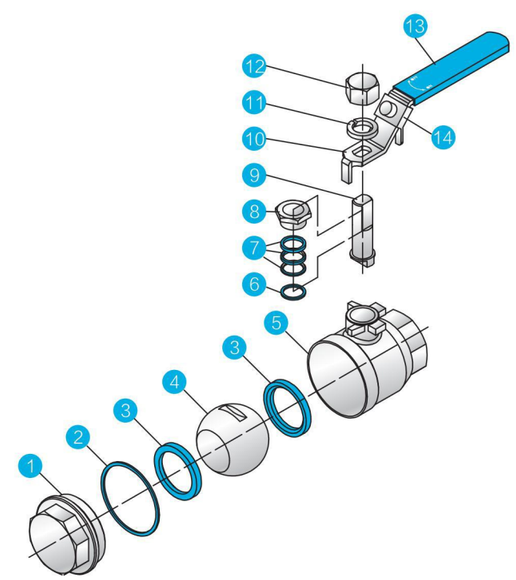

主要构件材料 Materials of Main Construction

Item No.	Part Name	Material		
1	Cap 阀盖	CF8M	CF8	WCB
2	Body Gasket 垫圈	PTFE		
3	Seal Seat 阀座	PTFE	R-PTFE	
4	Ball 阀球	SS316	SS304	
5	Body 阀体	CF8M	CF8	WCB
6	Thrust Washer 垫圈	PTFE		
7	Stem Packing 填料密封	PTFE		
8	Gland Ring 止动螺母	SS304		
9	Stem 阀杆	SS316	SS304	
10	Handle 手柄	SS201		
11	Spring Washer 弹簧垫圈	SS304		
12	Stem Nut 阀杆螺母	SS304		
13	Handle Cover 手柄皮套	Plastic		
14	Locking Device 锁定装置	SS201		

FLUIDO

2-PC BALL VALVE FULL PORT ,PN63
DIN STANDARD

PRODUCTS STANDARD
- ♦Blow-Out Proof Stem 防爆阀杆
- ♦Investment Casting Body 精密铸造阀体
- ♦Full Port 全通径设计
- ♦Face to Face:DIN3202-M3 长度：DIN3202-M3
- ♦All Kinds Of Thread Available 各种螺纹标准
- ♦Locking Device Handle Available 带锁手柄选配
- ♦Design Acc: ASME B16.34 设计标准：ANSI B16.34
- ♦Thread Acc螺纹标准：ANSIB1.20.1
  BS 21, DIN 2999 , ISO 7-1
- ♦Inspection & Testing Acc 检测标准：API 598
- ♦Seat:PTFE.Glass filled PTFE Carbon filled PTFE available

Pressure-Temperature
Rating 1/4"~4"

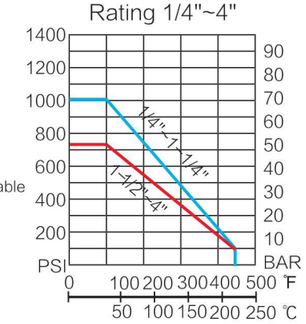

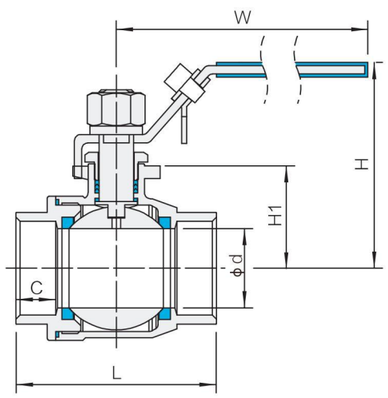

Size	φd	L	H	H1	W	C	Torque N.M	End
1/4"	10.5	50	51.5	20.5	98	11	4	BSPP BSPT NPT PT DIN ...
3/8"	12	60	58	25	98	12	4	
1/2"	15	75	64.5	28	120	16	5	
3/4"	20	80	67	30.5	120	16	7	
1"	25	90	78.5	39	150	19	9	
1-1/4"	32	110	83.5	44	150	22	16	
1-1/2"	38	120	98	54	170	23	23	
2"	48	140	107	63	170	25	26	
2-1/2"	65	185	133	80.5	250	36	50	
3"	78	205	143.5	91	250	36	86	
4"	98	240	168	107.5	300	41.5	118	

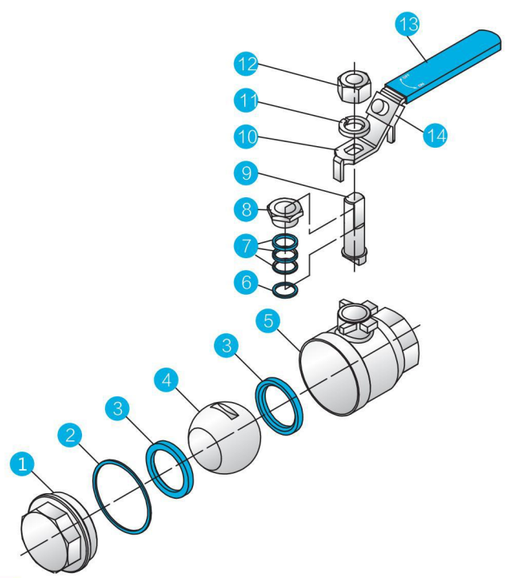

主要构件材料 Materials of Main Construction

Item No.	Part Name	Material		
1	Cap 阀盖	CF8M	CF8	WCB
2	Body Gasket 垫圈	PTFE		
3	Seal Seat 阀座	PTFE	R-PTFE	
4	Ball 阀球	SS316	SS304	
5	Body 阀体	CF8M	CF8	WCB
6	Thrust Washer 垫圈	PTFE		
7	Stem Packing 填料密封	PTFE		
8	Gland Ring 止动螺母	SS304		
9	Stem 阀杆	SS316	SS316	
10	Handle 手柄	SS201		
11	Spring Washer 弹簧垫圈	SS304		
12	Stem Nut 阀杆螺母	SS304		
13	Handle Cover 手柄皮套	Plastic		
14	Locking Device 锁定装置	SS201		

2-PC BALL VALVE FULL PORT 2000WOG

FLUIDO

PRODUCTS STANDARD
- ♦Blow-Out Proof Stem 防脱出阀杆
- Investment Casting Body 精密铸造阀体
- Full Port 全通径设计
- 2000PSI,PN120
- ♦All Kinds Of Thread Available 各种螺纹标准
- Locking Device Handle Available 带锁手柄选配
- Design Acc: ASME B16.34 设计标准：ANSI B16.34
- ♦Thread Acc螺纹标准：ANSIB1.20.1
  BS 21, DIN 2999, ISO 7-1
- ♦Inspection & Testing Acc 检测标准：API 598
- ♦Seat:PTFE.Glass filled PTFE Carbon filled PTFE available

Pressure-Temperature
Rating 1/4"~4"

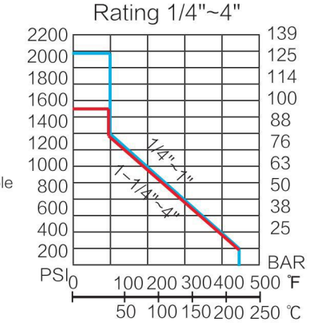

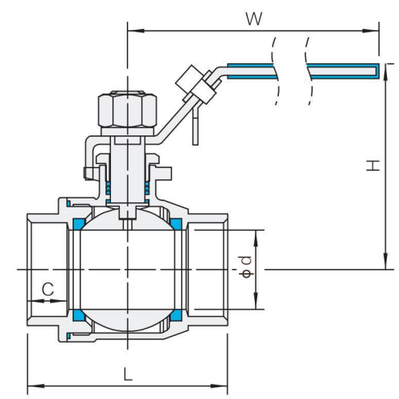

Size	φd	L	H	W	C	Torque N.m	End
1/4"	10.5	58	58	100	11	4	BSPP BSPT NPT DIN ...
3/8"	10.5	58	58	100	12	4	
1/2"	15	65	62.5	120	13.5	5	
3/4"	20	73	67	135	14.5	7	
1"	25	82	80.5	160	17.5	9	
1-1/4"	32	92	85.5	160	19	16	
1-1/2"	38	109	102	180	21	23	
2"	48	122	110	180	23	26	

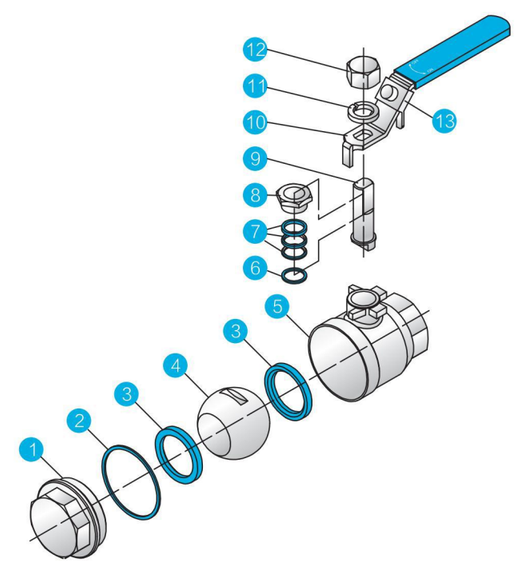

主要构件材料 Materials of Main Construction

Item No.	Part Name	Material		
1	Cap 阀盖	CF8M	CF8	WCB
2	Body Gasket 垫圈	PTFE		
3	Seal Seat 阀座	PTFE	R-PTFE	
4	Ball 阀球	SS316	SS304	
5	Body 阀体	CF8M	CF8	WCB
6	Thrust Washer 垫圈	PTFE		
7	Stem Packing 填料密封	PTFE		
8	Gland nut 止动螺母	SS304		
9	Stem 阀杆	SS316	SS304	
10	Handle 手柄	SS201		
11	Spring Washer 弹簧垫圈	SS304		
12	Stem Nut 阀杆螺母	SS304		
13	Locking Device 锁定装置	SS201		

特 征：

通径设计
工作压力：600PSI(PN40)
工作温度：-20℃~250℃
(-4° F~482° F) 1/4"-4"
硅溶胶阀体及阀盖/防吹出阀杆
驱动方式：手动

螺纹端可按:
ANSI B1.20.1(NPT螺纹)
ISO228/1 & DIN259(BSP、G螺纹)
DIN2999 & BS21(BSPT螺纹)

Features :

Full Port
W.P.: 600PSI(PN63)
W.T.: -20℃~250℃
(-4° F~482° F)1/4"-4"
Investment Casting Body & Cap
Blow-Out Proof Stem
Type of Drive: Manual

Thread End:
ANSI B1.20.1(NPT)
ISO228/1 & DIN259(G)
DIN2999 & BS21(BSPT)

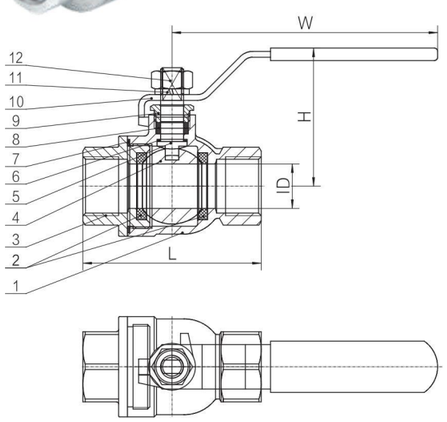

主要构件材料 Materials of Main Construction

No.	部件名称	Component Name	材料Material		
1	阀体	Body	CF8M	CF8	WCB
2	阀座	Seat	PTFE	PTFE	PTFE
3	阀盖	Bonnet	CF8M	CF8	WCB
4	球	Ball	SS316	SS304	SS304
5	阀杆	Stem	SS316	SS304	SS304
6	垫片	Gasket	PTFE	PTFE	PTFE
7	弹性垫圈	Sealring	PTFE	PTFE	PTFE
8	阀杆填料	Packing	PTFE	PTFE	PTFE
9	填料压盖	Packing Gland	SS304	SS304	SS202
10	手柄	Handle	SS201	SS201	SS202
11	弹簧垫圈	Spring Washer	SS304	SS304	SS202
12	六角螺母	Hexnut	SS304	SS304	SS202
13	锁片	Lock	SS201	SS201	SS202

主要尺寸 Dimensions

NPS	DN	ID	L	H	W
1/4"	8A	6.1	56.2	50.1	82
3/8"	10A	6.1	56.8	50.1	82
1/2"	15A	7	65	58	99
3/4"	20A	7.1	71.6	64.5	99
1"	25A	7.8	83.3	75.5	115
1-1/4"	32A	8.5	96.9	88.4	128
1-1/2"	40A	8.8	106.5	97.7	155

特 征：

通径设计
工作压力：600PSI(PN40)
工作温度：-20℃~250℃(-4° F~482° F)
1/4"-4"
硅溶胶阀体及阀盖/防吹出阀杆
驱动方式：手动

螺纹端可按:
ANSI B1.20.1(NPT螺纹)
ISO228/1 & DIN259(BSP、G螺纹)
DIN2999 & BS21(BSPT螺纹)

Features :

Full Port
W.P.: 600PSI(PN63)
W.T.: -20℃~250℃(-4° F~482° F)
1/4"-4"
Investment Casting Body & Cap
Blow-Out Proof Stem
Type of Drive: Manual

Thread End:
ANSI B1.20.1(NPT)
ISO228/1 & DIN259(G)
DIN2999 & BS21(BSPT)

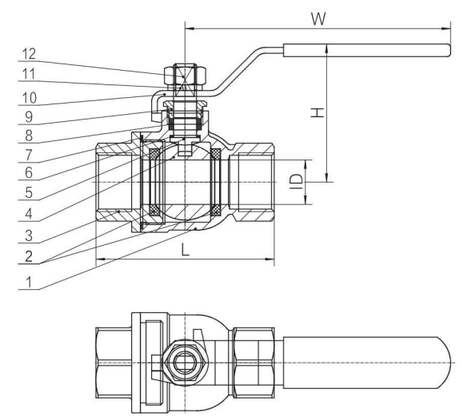

主要构件材料 Materials of Main Construction

No.	部件名称	Component Name	材料Material		
1	阀体	Body	CF8M	CF8	WCB
2	阀座	Seat	PTFE	PTFE	PTFE
3	阀盖	Bonnet	CF8M	CF8	WCB
4	球	Ball	SS316	SS304	SS304
5	阀杆	Stem	SS316	SS304	SS304
6	垫片	Gasket	PTFE	PTFE	PTFE
7	弹性垫圈	Sealring	PTFE	PTFE	PTFE
8	阀杆填料	Packing	PTFE	PTFE	PTFE
9	填料压盖	Packing Gland	SS304	SS304	SS202
10	手柄	Handle	SS201	SS201	SS202
11	弹簧垫圈	Spring Washer	SS304	SS304	SS202
12	六角螺母	Hexnut	SS304	SS304	SS202
13	锁片	Lock	SS201	SS201	SS202

主要尺寸 Dimensions

NPS	DN	ID	L	H	W
1/2"	15A	7.5	63.8	56.3	99
3/4"	20A	7.5	69.9	62.4	99
1"	25A	7.8	85.1	77.3	115
1-1/4"	32A	8.2	92.5	84.3	128
1-1/2"	40A			90.8	155
2"	50A	8.5	113.2	104.7	165

FLUIDO

2-PC BALL VALVE FULL PORT 1000WOG, ISO-5211 DIRECT MOUNTING PAD

PRODUCTS STANDARD
- ♦Blow-Out Proof Stem 防脱出阀杆
- ♦Investment Casting Body 精密铸造阀体
- ♦Full Port 全通径设计
- ♦ISO5211 Dircet Mounting pad 直装平台设计
- ♦Locking Device Handle Available 带锁手柄选配
- ♦Design Acc设计标准：ASME B16.34
- ♦Thread Acc螺纹标准：ANSI B1.20.1 、BS 21 DIN 2999 ISO 7-1
- ♦Inspection & Testing Acc 检测标准：API 598
- ♦Seat:PTFE.Glass filled PTFE Carbon filled PTFE available

Pressure-Temperature Rating 1/4"~4"

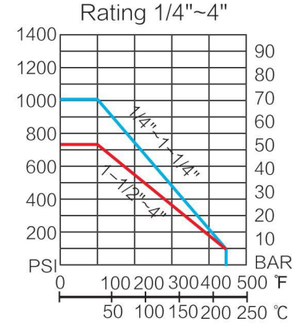

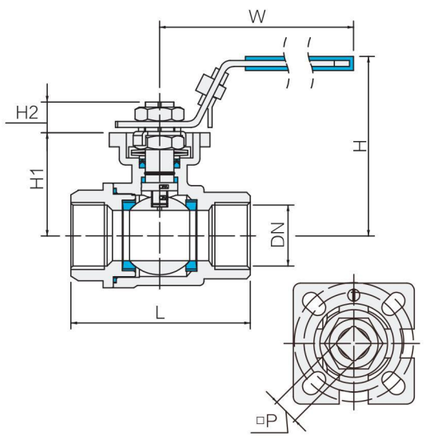

Size	DN	L	H	H1	H2	W	□P	Torque N.M	ISO5211
1/4"	10	50	57	30	7.5	110	9	4	F03/F04
3/8"	12	50	57	30	7.5	110	9	4	F03/F04
1/2"	15	60	65	37	8	110	9	5	F03/F04
3/4"	20	70	67	40	8	110	9	7	F03/F04
1"	25	90	80	49	10	130	11	9	F04/F05
1-1/4"	32	95	83	53	10	160	11	16	F04/F05
1-1/2"	38	106	99	62	14	185	14	21	F05/F07
2"	48	120	107	70	14	185	14	25	F05/F07
2-1/2"	65	160	165	93	18.5	250	17	48	F07/F10
3"	78	180	180	106	18.5	250	17	82	F07/F10
4"	98	220	200	126	18.5	310	19	113	F07/F10

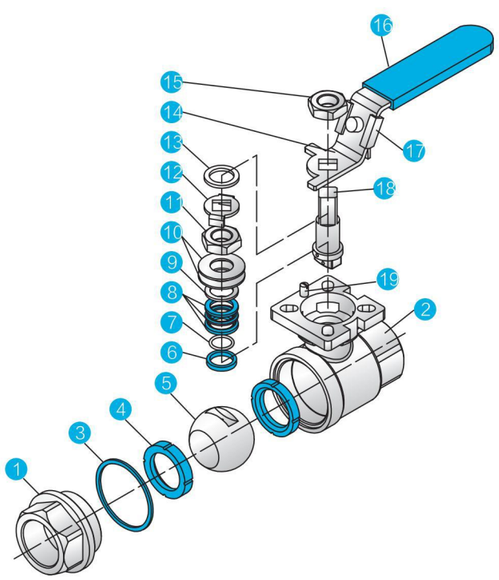

主要构件材料 Materials of Main Construction

Item No.	Part Name	Material		
1	Cap 阀盖	CF8M	CF8	WCB
2	Body 阀体	CF8M	CF8	WCB
3	Seal Gasket 垫圈	PTFE	R-PTFE	
4	Seat 阀座	PTFE	R-PTFE	
5	Ball 球体	SS316	SS304	
6	Thrust Washer 垫圈	PTFE		
7	O-Ring O型圈	VITON		
8	Stem Packing 填料密封	PTFE		
9	Gland 压套	SS304		
10	Spring Washer 蝶簧	SS304		
11	Gland Nut 止动螺母	SS304		
12	Stop Washer 止动垫圈	SS304		
13	Gland 压套	SS304		
14	Handle 手柄	SS201		
15	Stem Nut 阀杆螺母	SS304		
16	Handle Cover 手柄皮套	Plastic		
17	Locking Device 锁定装置	SS201		
18	Stem 阀杆	SS316	SS304	
19	Locking Bolt 定位螺栓	SS304		

3-PC BALL VALVE FULL PORT 1000WOG, PN63

FLUIDO

PRODUCTS STANDARD
- ♦Blow-Out Proof Stem 防脱出阀杆
- ♦Investment Casting Body 精密铸造阀体
- ♦Full Port 全通径设计
- ♦Locking Device Available 带锁手柄
- ♦Thread Acc螺纹标准：ANSI B1.20.1 BS 21, DIN 2999, ISO 7-1
- ♦Inspection & Testing Acc 检测标准：API 598
- ♦Seat:PTFE.Glass filled PTFE Carbon filled PTFE available

Pressure-Temperature Rating 1/4"~4"

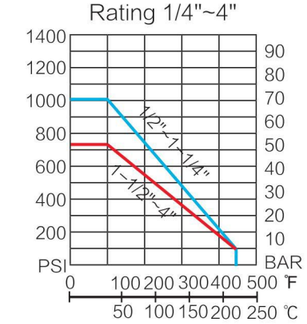

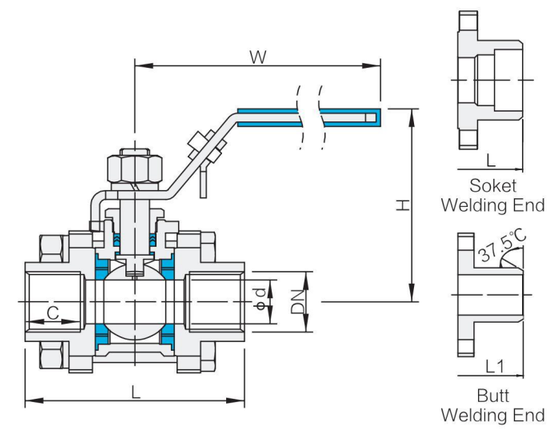

Size	DN	L	L1	H	W	C
1/4"	8	63	63	54	100	13
3/8"	10	63	63	54	100	13
1/2"	15	63	65	58.5	100	13.5
3/4"	20	70	76	64.5	120	14.5
1"	25	82	86	68	120	17
1-1/4"	32	92	98	79.5	150	18.5
1-1/2"	40	104	114	90.5	170	19
2"	50	115	132	98	170	22.5
2-1/2"	65	190	164	123	210	29
3"	80	205	182	133.5	250	29.5
4"	100	270	235	162.5	300	33

L1=Butt Welding End length

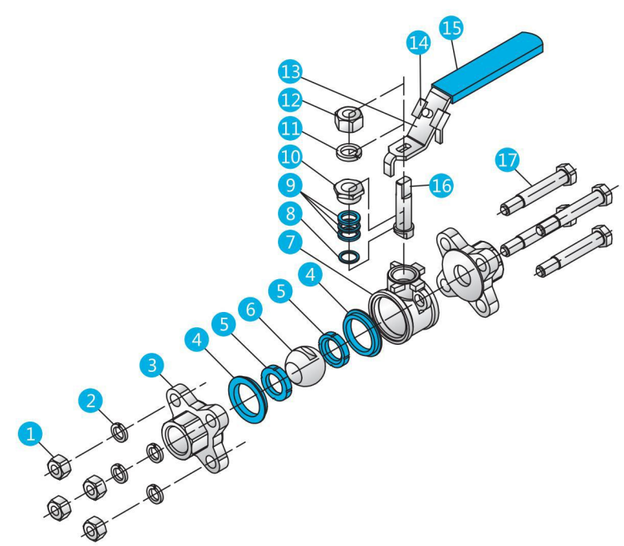

主要构件材料 Materials of Main Construction

Item No.	Part Name	Material		
1	Nut 螺母	A2-70		
2	Spring Washer 弹簧垫片	SS304		
3	Cap 阀盖	CF8M	CF8	WCB
4	Body Gasket 垫圈	PTFE	R-PTFE	
5	Seal Seat 阀座	PTFE	R-PTFE	
6	Ball 阀球	SS316	SS304	
7	Body 阀体	CF8M	CF8	WCB
8	Thrust Washer 垫圈	PTFE		
9	Stem Packing 填料密封	PTFE		
10	Gland Nut 止动螺母	SS304		
11	Spring Washer 弹簧垫圈	SS304		
12	Stem Nut 阀杆螺母	SS304		
13	Handle 手柄	SS201		
14	Locking Device 锁定装置	SS201		
15	Handle Cover 手柄皮套	Plastic		
16	Stem 阀杆	SS316	SS04	
17	Bolt 螺栓	A2-70		

3-PC BALL VALVE FULL PORT 1000WOG, PN63 ISO-5211 DIRECT MOUNTING PAD

PRODUCTS STANDARD
- ♦Blow-Out Proof Stem 防脱出阀杆
- ♦Investment Casting Body 精密铸造阀杆
- ♦Full Port 全通径设计
- ♦ISO5211 Dircet Mounting pad 直装式平台
- ♦Locking Device Handle Available 带锁手柄
- ♦Design Acc 设计标准：ASME B16.34
- ♦Thread Acc 螺纹标准：ANSI B1.20.1 BS 21 DIN 2999 ISO 7-1
- ♦Inspection & Testing Acc 检测标准：API 598
- ♦Seat:PTFE.Glass filled PTFE Carbon filled PTFE available

Pressure-Temperature Rating 1/2"~4"

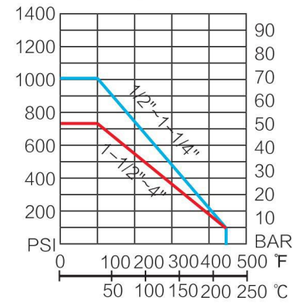

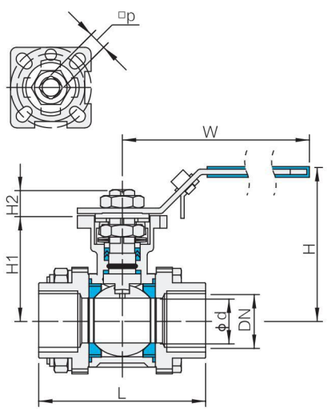

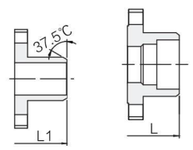

Butt Welding End Soket Welding End

Size	DN	L	L1	H	H1	H2	W	□P	A	Torque N.M	ISO5211
1/2"	15	75	75	70	40	7	120	9	22.5	5	F03/F04
3/4"	20	80	90	80	50	9	120	9	27	7	F03/F04
1"	25	90	100	90	57	11	135	11	34.5	10	F04/F05
1-1/4"	32	110	110	95	61	11	150	11	43	16	F04/F05
1-1/2"	40	120	125	105	76	14	185	14	49	22	F05/F07
2"	48	140	150	112	84	14	185	14	62	27	F05/F07
2-1/2"	65	185	190	174	100	16	248	17	76.5	49	F07/F10
3"	80	205	220	185	111	16	248	17	92	83	F07/F10
4"	100	240	270	205	130	16.5	310	19	115.5	115	F07/F10

L1=Butt Welding End length

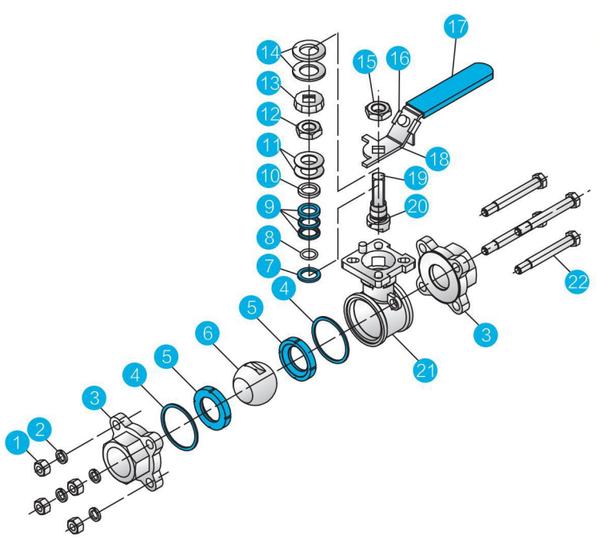

主要构件材料 Materials of Main Construction

Item No.	Part Name	Material		
1	Nut 螺母	SS304		
2	Spring Washer 弹簧垫圈	SS304		
3	Cap 阀盖	CF8M	CF8	WCB
4	Body Gasket 垫圈	PTFE	R-PTFE	
5	Seal Seat 阀座	PTFE	R-PTFE	
6	Ball 球	SS316	SS304	
7	Thrust Washer 垫圈	PTFE		
8	O-Ring O型圈	VITON		
9	Stem V-Ring Packing 阀杆V型密封	PTFE	R-PTFE	
10	Gland 压套	SS304		
11	Belleville Washer 蝶簧	SS304		
12	Gland nut 止动螺母	SS304		
13	Stop Washer 止动垫圈	SS304		
14	Gland 压套	SS304		
15	Stem Nut 阀杆螺母	SS304		
16	Locking Device 锁定装置	SS304		
17	Handle Cover 手柄皮套	PLASTIC		
18	Handle 手柄	SS201		
19	Stem 阀杆	SS316	SS304	
20	Thrust Gasket 止推垫片	PTFE		
21	Body 阀体	CF8M	CF8	WCB
22	Bolt 螺栓	SS304		

3PC BALL VALVE 2000 WOG (DIRECT MOUNTING PAD)

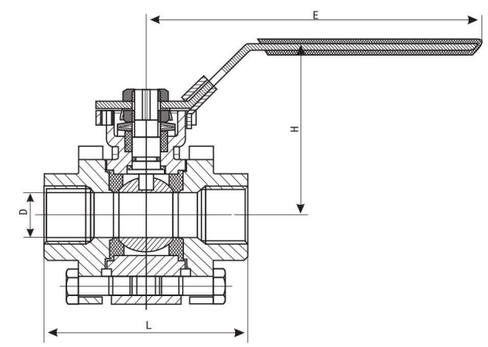

性能规范 Specifications

公称压力 Nominal pressure	2000WOG
强度试验压力 Strength testing pressure	12MPa
低压气密封试验压力 Seal Testing Pressure(Low Pressure)	0.6MPa
适用温度 applicable temperature	-20-180℃

主要构件材料 Main Parts and Material

部件 Part Name	材料 Material
阀体 Body	WCB/CF8
阀盖 Bonnet	WCB/CF8
球体 Ball	304
阀杆 Stem	304
密封圈 Seal gasket	聚四氟乙烯 PTFE
填料Packing	聚四氟乙烯 PTFE

主要尺寸 Dimensions

DN	L	D	H	E
15	74	14	72	145
20	88	19	77	145
25	90	24	82	166
32	110	32	86	166
40	120	36	106	206
50	140	39	114	206

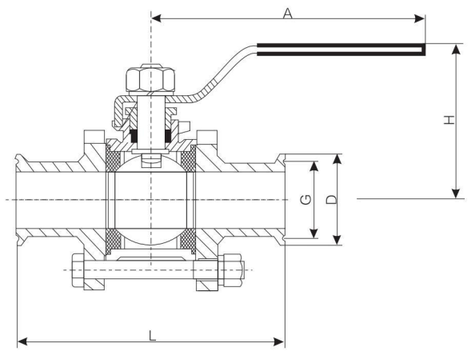

性能规范 Specifications

公称压力 Nominal pressure	1000WOG
强度试验压力 Strength testing pressure	1.6MPa
低压密封试验压力 Seal test pressure(low pressure)	0.6MPa
高压密封试验压力 Seal test pressure(high pressure)	1.0MPa
适用介质 Applicable medium	水、油品、气 Water、oil、gas
适用温度 Applicable temperature	-40~120℃

主要构件材料 Materials of Main Construction

部件 Part Name	材质 Material		
阀体 Valve body	WCB	304	316
球体 Ball	304	304	316
阀杆 Stem	304	304	316
密封圈 Seal gasket	聚四氟乙烯 PTFE		
填料 Packing	聚四氟乙烯 PTFE		

主要尺寸 Dimensions

Unit:mm

DN	G	D	L	H	A
15	½#	34	95	68	125
20	3/4#	50.5	105	70	125
25	1#	50.5	115	80	145
32	11/4#	50.5	125	84	145
40	11/2#	50.5	135	93	205
50	2#	64	150	100	205
65	21/2#	91	190	142	250
80	3#	106	220	155	250

PRODUCTS STANDARD
- ♦Blow-Out Proof Stem 防脱出阀杆
- ♦Investment Casting Body 精密铸造阀体
- ♦Reduce Port 缩径设计
- ♦L/T Port Upon Request L 和 T 型设计
- ♦ISO 5211 Direct Mounting Pad 直装型平台设计
- ♦Locking Device Handle Available 带锁手柄选配
- ♦Design Acc设计标准：ASME B16.34
- ♦Thread Acc螺纹标准：ANSI B1.20.1 BS 21 DIN 2999 ISO 7-1
- ♦Inspection & Testing Acc检测标准：API598
- ♦Seat:PTFE.Glass filled PTFE Carbon filled PTFE available

Pressure-Temperature Rating 1/4"~4"

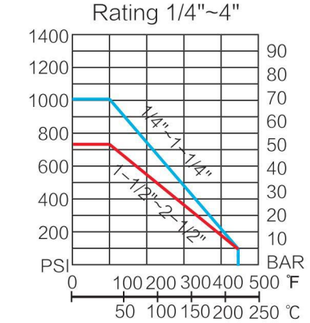

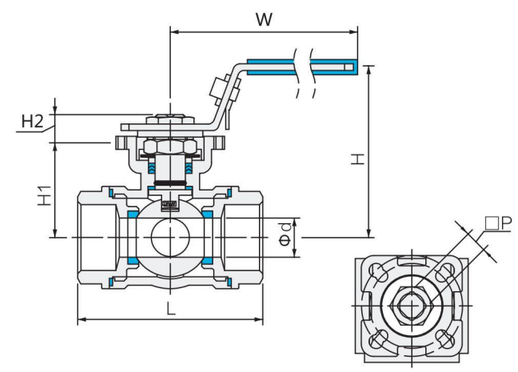

2-1/2 Size on application

Size	Ød	L	H	H1	H2	W	□P	Torque N.M	ISO5211
1/4"	12	68	71	39	9	120	9	5	F03/F04
3/8"	12	68	71	39	9	120	9	7	F03/F04
1/2"	12	68	71	39	9	120	9	10	F03/F04
3/4"	15	88	74	42.5	9	120	9	16	F03/F04
1"	20	90	90	49	11	135	11	22	F04/F05
1-1/4"	25	105	95	50	11	187	11	27	F04/F05
1-1/2"	32	135	99	63.5	14	187	14	49	F05/F07
2"	38	149	108	77	14	187	14	83	F05/F07

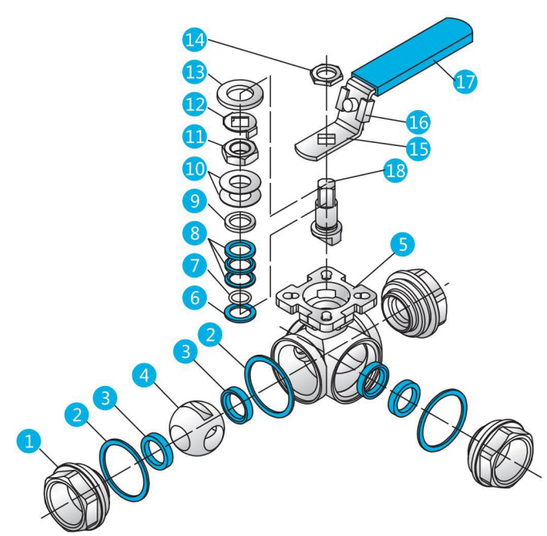

主要构件材料 Materials of Main Construction

Item No.	Part Name	Material		
1	Cap 阀盖	CF8M	CF8	WCB
2	Body Gasket 阀体密封	PTFE		
3	Seat 阀座	PTFE	R-PTFE	
4	Ball 阀球	SS316	SS304	
5	Body 阀体	PTFE	R-PTFE	
6	Thrust Washer 密封垫圈	PTFE		
7	O-Ring O型圈	VITON		
8	Packing 填料	PTFE		
9	Gland 压套	SS304		
10	Belleville Washer 蝶簧	SS301		
11	Gland nut 止动螺母	SS304		
12	Stop Washer 紧定垫圈	SS304		
13	Gasket 垫圈	SS304		
14	Stem Nut 阀杆螺母	SS304		
15	Handle 手柄	SS201		
16	Locking Device 锁定装置	SS201		
17	Handle Cover 手柄皮套	PLASTIC		
18	Stem 阀杆	SS316	SS304	

2-PC BALL FLANGE VALVE FULL PORT
ISO MOUNTING PAD

PRODUCTS STANDARD
- ♦Blow-Out Proof Stem 防脱出阀杆
- ♦Investment Casting Body 精密铸造阀体
- ♦Full Port 全通径设计
- ♦Face to Face:ANSI B16.10/JIS B2002/DINPN16-40
- ♦Casting Handle 铸造手柄
- ♦Fire-Safe Design Avavilable Acc:API 607 防火设计
- ♦Design Acc设计标准：ASME B16.34
- ♦Flange Standard:ASME 16.5/JIS B2220/DIN 2633
- ♦Inspection & Testing Acc 检测标准：API 598
- ♦Seat:PTFE.Glass filled PTFE Carbon filled PTFE available

Pressure-Temperature Rating DN15~DN200

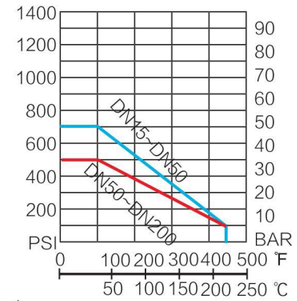

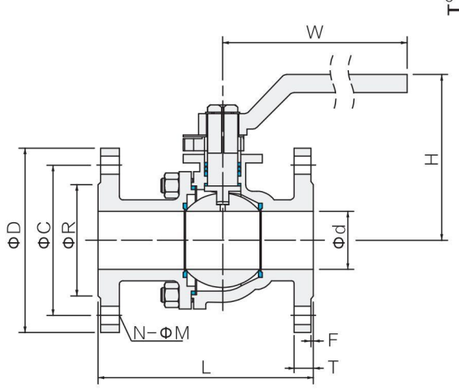

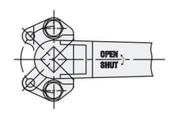

1/2"~4"

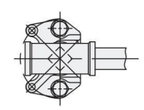

5"~8"

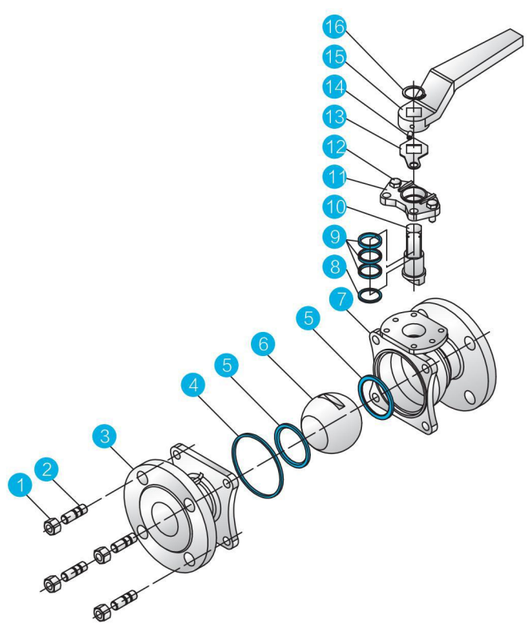

主要构件材料 Materials of Main Construction

Item No.	Part Name	Material		
1	Nut 螺母	SS304		
2	Stud 螺栓	SS304		
3	Cap 阀盖	CF8M	CF8	WCB
4	Body Gasket 垫圈	PTFE	R-PTFE	
5	Seat 阀座	PTFE	R-PTFE	
6	Ball 球	SS316	SS304	
7	Body 阀体	CF8M	CF8	WCB
8	Thrust Washer 垫圈	PTFE		
9	Stem Packing 填料密封	PTFE		
10	Stem 阀杆	SS316	SS304	
11	Stop Cap 压盖	SS304		
12	Bolt 螺栓	SS304		
13	Locking Pin 定位片	SS304		
14	Locking Nut 锁紧螺母	SS304		
15	Handle 手柄	CF8		
16	Stop Washer 定位圈	SS201		

ANSI 150# unit:mm

Size	φd	L	H	W	φR	φC	φD	N-φM	T	F	Torque N.M
1/2"	15	108	77.5	148	35	60.5	89	4-16	11.2	1.6	7
3/4"	20	117	79	148	43	70	98	4-16	11.2	1.6	9
1"	25	127	88	148	51	79.5	108	4-16	12.0	1.6	11
1-1/4"	32	140	100	170	64	89	117	4-16	12.7	1.6	18
1-1/2"	38	165	122	230	73	98.5	127	4-16	14.3	1.6	23
2"	50	178	130	230	92	120.5	152	4-19	15.9	1.6	28
2-1/2"	65	190	148	230	105	139.5	178	4-19	17.5	1.6	55
3"	78	203	167	310	127	152.5	190.5	4-19	19.1	1.6	90
4"	100	229	188	310	157	190.5	229	8-19	23.9	1.6	120
5"	125	356	238	500	186	216	254	8-22	23.9	1.6	268
6"	150	394	278.5	645	216	241.5	279	8-22	25.4	1.6	335
8"	200	457	340	845	270	298.5	343	8-22	28.6	1.6	650

ANSI 300# unit:mm

Size	φd	L	H	W	φR	φC	φD	N-φM	T	F	Torque N.M
1/2"	15	140	80	148	35	66.5	95	4-16	14.3	1.6	7
3/4"	20	152	85	148	43	82.5	117	4-19	15.9	1.6	9
1"	25	165	98	170	51	89	124	4-19	17.5	1.6	11
1-1/4"	32	178	115	170	64	98.5	133	4-19	19.1	1.6	18
1-1/2"	38	190	135	230	73	114.5	156	4-22	20.7	1.6	23
2"	50	216	140	230	92	127	165	8-19	22.3	1.6	28
2-1/2"	65	241	152	310	105	149	190	8-22	25.4	1.6	55
3"	78	283	172	310	127	168	210	8-22	28.6	1.6	90
4"	100	305	195	400	157	200	254	8-22	31.8	1.6	120
5"	125	381	250	550	186	235	279	8-22	35	1.6	268
6"	150	403	285	750	216	270	318	12-22	36.6	1.6	335
8"	200	502	350	900	270	330	381	12-25	41.3	1.6	650

JIS 10K unit:mm

Size	φd	L	H	W	φR	φC	φD	N-φM	T	F	Torque N.M
1/2"	15	110	77.5	148	51	70	95	4-15	12	1	7
3/4"	20	120	79	148	56	75	100	4-15	14	1	9
1"	25	130	88	148	67	90	125	4-19	14	1	11
1-1/4"	32	140	100	170	76	100	135	4-19	16	2	18
1-1/2"	38	165	122	230	81	105	140	4-19	16	2	23
2"	50	180	130	230	96	120	155	4-19	16	2	28
2-1/2"	65	190	148	230	116	140	175	4-19	18	2	55
3"	78	200	167	310	126	150	185	8-19	18	2	90
4"	100	230	188	310	151	175	210	8-19	18	2	120
5"	125	300	238	500	182	210	250	8-23	20	2	268
6"	150	340	278.5	645	212	240	280	8-23	22	2	335
8"	200	450	340	845	262	290	330	8-23	22	2	650

JIS 20K unit:mm

Size	φd	L	H	W	φR	φC	φD	N-φM	T	F	Torque N.M
1/2"	15	140	80	148	51	70	95	4-15	14	1	7
3/4"	20	152	85	148	56	75	100	4-15	16	1	9
1"	25	165	98	170	67	90	125	4-19	16	1	11
1-1/4"	32	178	115	170	76	100	135	4-19	18	2	18
1-1/2"	38	190	135	230	81	105	140	4-19	18	2	23
2"	50	216	140	230	96	120	155	8-19	18	2	28
2-1/2"	65	241	152	310	116	140	175	8-19	20	2	55
3"	78	283	172	310	132	160	200	8-23	22	2	90
4"	100	305	195	400	160	185	225	8-23	24	2	120
5"	125	381	250	550	195	225	270	8-25	26	2	268
6"	150	403	285	750	230	260	305	12-25	28	2	335
8"	200	502	350	900	275	305	350	12-25	30	2	650

DIN PN16 unit:mm

Size	φd	L	H	W	φR	φC	φD	N-φM	T	F	Torque N.M
1/2"	15	115	77.5	148	45	65	95	4-14	14	2	7
3/4"	20	120	79	148	58	75	105	4-14	16	2	9
1"	25	125	88	148	68	85	115	4-14	16	2	11
1-1/4"	32	130	100	170	78	100	140	4-18	16	2	18
1-1/2"	38	140	122	230	88	110	150	4-18	16	3	23
2"	50	150	130	230	102	125	165	4-18	18	3	28
2-1/2"	65	170	148	230	122	145	185	4-18	18	3	55
3"	78	180	167	310	138	160	200	8-18	20	3	90
4"	100	190	188	310	158	180	220	8-18	20	3	120
5"	125	325	238	500	188	210	250	8-18	22	3	268
6"	150	350	278.5	645	212	240	285	8-22	22	3	335
8"	200	400	340	845	268	295	340	12-22	24	3	650

DIN PN40 unit:mm

Size	φd	L	H	W	φR	φC	φD	N-φM	T	F	Torque N.M
1/2"	15	115	77.5	148	45	65	95	4-14	16	2	7
3/4"	20	120	79	148	58	75	105	4-14	18	2	9
1"	25	125	88	170	68	85	115	4-14	18	2	11
1-1/4"	32	130	100	170	78	100	140	4-18	18	2	18
1-1/2"	38	140	122	230	88	110	150	4-18	18	3	23
2"	50	150	130	230	102	125	165	4-20	20	3	28
2-1/2"	65	170	148	310	122	145	185	4-22	22	3	55
3"	78	180	167	310	138	160	200	8-24	224	3	90
4"	100	190	188	400	158	180	235	8-24	24	3	120
5"	125	325	238	550	188	210	270	8-26	26	3	268
6"	150	350	278.5	750	212	240	300	8-22	28	3	335
8"	200	400	340	900	268	295	375	12-34	34	3	650

DESIGN FEATURES

- ♦Built-in ISO 5211 Direct Mounting Pad for Easy Automation
- ♦Fire Safe Design and Construction
- ♦Investment Casting up to DN 150, Sand Casting for DN200
- ♦Anti-static Devices for Ball-stem-body
- ♦Blow-out Proof Stem
- ♦Pressure Balance Hole in Ball Slot
- ♦Double Stem Sealing to Comply with TA-LUFT Requirements
- ♦Casting Boss on Body for Draining and Double Block &Bleed

APPLICABLE STANDARDS

- ♦Desian Rating: DIN3357/1,2,EN 12516-1
- ♦Fire Safe: API607 4th1993,BS 6755 Part 2
- ♦Face to Face: DIN 3202 F1(DN15-DN100)/F7(DN125-DN250)/F17,
- ♦F4(DN15-DN100)/F5(DN125-DN250)/F18
- ♦Wall Thickness: ASME B16.34, EN12516-1
- ♦End Flange: DIN 2542~DIN2545, EN 1092
- ♦Inspection & Testing: DIN 3230/3, EN 12266
- ♦Connection: DIN 2501/1 PN10-PN40
- ♦Face:DIN 2562 FORM C

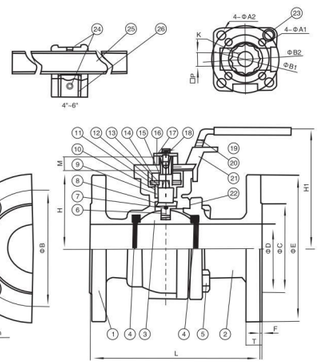

主要构件材料 Materials of Main Construction

No.	Part Name	Materials		
1	Body	CF8M	CF8	WCB
2	End Cap	CF8M	CF8	WCB
3	Ball	CF8M	CF8	
4	Ball Seat	PTFE		
5	Bolting	A193-B8		A193-B7
6	Stem	SUS316	SUS304	
7	Anti-Static	SUS316	SUS304	
8	Stem Seal-Ring	PTFE/GRAFOIL*		
9	V-Ring Packing	PTFE/GRAFOIL*		
10	Bushing	50%SS+50%PTFE/SUS304*		
11	Gland	SUS304		
12	Belleville Washer	SUS301		
13	Stem Nut	SUS304		
14	Stop-lock-Cap	SUS304		
15	Handle Gland	SUS304		
16	Square Washer	SUS304		
17	Circle Washer	SUS304		
18	Screw	SUS304		
19	Handle sleeve(1/2"~3")	VINYL PLASTIC		
20	Handle(1/2"~3")	SUS304		
21	Lock Device(1/2"~3")	SUS304		
22	Body Gasket	PTFE/SUS316 SPIRAL WOUND/GRAFOIL*		
23	Stop Bolt	SUS304		
24	Set Screwed(4"~6")	SUS304		
25	Handle(4"~6")	SUS304		
26	Handle Adapter(4"~6")	SUS304		

主要尺寸 Dimensions

Size	1/2"	3/4"	1"	1-1/4"	1-1/2"	2"	2-1/2"	3"	4"	5"	6"	8"
ΦD	15.0	20.0	25.0	32.0	38.0	50.0	64.0	76.0	100.0	125.0	150.0	200.0
L	108.0	117.0	127.0	140.0	165.0	178.0	190.0	203.0	229.0	356.0	394.0	457.0
ΦC	35.0	43.0	51.0	63.5	73.2	92.0	104.7	127.0	157.2	186.0	216.0	270.0
ΦE	89.0	98.6	108.0	117.0	127.0	152.5	177.8	190.5	228.6	254.0	279.4	342.9
ΦB	60.5	70.0	79.2	88.9	98.6	120.7	139.7	152.4	190.5	216.0	241.3	298.5
T	9.7	10.5	11.2	12.7	14.2	15.9	17.5	19.1	23.9	24.0	25.4	28.5
f	1.6	1.6	1.6	1.6	1.6	1.6	1.6	1.6	1.6	1.6	1.6	1.6
N	4.0	4.0	4.0	4.0	4.0	4.0	4.0	4.0	8.0	8.0	8.0	8.0
Φh	16.0	16.0	16.0	16.0	16.0	19.0	19.0	19.0	19.0	22.3	22.3	22.3
H	48.0	53.0	64.0	71.0	76.0	85.0	104.0	114.0	140.0	183.0	202.0	253.0
H1	79.0	84.0	95.0	103.0	111.0	120.0	153.0	163.0	182.0	260.0	28.0	non
K	7/16-24UNF	7/16-24UNF	9/16-18UNF	9/16-18UNF	5/8-18UNF	5/8-18UNF	7/8-14UNF	7/8-14UNF	1-1/8-12UNF	1-3/8-12UNF	1-3/8-12UNF	1-3/4-12UNF
P	9.0	9.0	11.0	11.0	14.0	14.0	17.0	17.0	22.0	27.0	27.0.	27.0
A1	6.0	6.0	6.0	6.0	7.0	7.0	9.0	9.0	non	14.0	14.0	14.0
A2	6.0	6.0	7.0	7.0	9.0	9.0	11.0	11.0	11.0	non	non	non
B1	36.0	36.0	42.0	42.0	50.0	50.0	70.0	70.0	non	125.0	125.0	125.0
B2	42.0	42.0	50.0	50.0	70.0	70.0	102.0	102.0	102.0	non	non	non

DESIGN FEATURES

- ♦Built-in ISO 5211 Direct Mounting Pad for Easy Automation
- ♦Fire Safe Design and Construction
- ♦Investment Casting up to DN 150, Sand Casting for DN200
- ♦Anti-static Devices for Ball-stem-body
- ♦Blow-out Proof Stem
- ♦Pressure Balance Hole in Ball Slot
- ♦Double Stem Sealing to Comply with TA-LUFT Requirements
- ♦Casting Boss on Body for Draining and Double Block &Bleed

APPLICABLE STANDARDS

- ♦Desian Rating: DIN3357/1,2,EN 12516-1
- ♦Fire Safe: API607 4th1993,BS 6755 Part 2
- ♦Face to Face: DIN 3202 F1(DN15-DN100)/F7(DN125-DN250)/F17,
- ♦F4(DN15-DN100)/F5(DN125-DN250)/F18
- ♦Wall Thickness: ASME B16.34, EN12516-1
- ♦End Flange: DIN 2542~DIN2545, EN 1092
- ♦Inspection & Testing: DIN 3230/3, EN 12266
- ♦Connection: DIN 2501/1 PN10-PN40
- ♦Face:DIN 2562 FORM C

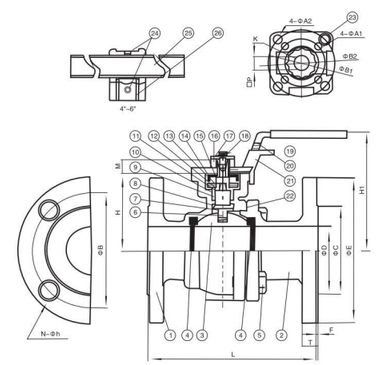

主要构件材料 Materials of Main Construction

No.	Part Name	Materials		
1	Body	1.4408	1.4308	1.0619
2	End Cap	1.4408	1.4308	1.0619
3	Ball	1.4408	1.4308	
4	Ball Seat	PTFE		
5	Bolting	A193-B8		A193-B7
6	Stem	SUS316	SUS304	
7	Anti-Static	SUS316	SUS304	
8	Stem Seal-Ring	PTFE/GRAFOIL*		
9	V-Ring Packing	PTFE/GRAFOIL*		
10	Bushing	50%SS+50%PTFE/SUS304*		
11	Gland	SUS304		
12	Belleville Washer	SUS301		
13	Stem Nut	SUS304		
14	Stop-lock-Cap	SUS304		
15	Handle Gland	SUS304		
16	Square Washer	SUS304		
17	Circle Washer	SUS304		
18	Screw	SUS304		
19	Handle sleeve(1/2"~3")	VINYL PLASTIC		
20	Handle(1/2"~3")	SUS304		
21	Lock Device(1/2"~3")	SUS304		
22	Body Gasket	PTFE/SUS316 SPIRAL WOUND/GRAFOIL*		
23	Stop Bolt	SUS304		
24	Set Screwed(4"~6")	SUS304		
25	Handle(4"~6")	SUS304		
26	Handle Adapter(4"~6")	SUS304		

主要尺寸 Dimensions

Size	DN15	DN20	DN25	DN32	DN40	DN50	DN65		DN80		DN100		DN125		DN150		DN200		
	1/2"	3/4"	1"	1-1/4"	1-1/2"	2"	2-1/2"		3"		4"		5"		6"		8"		
PN	10		16		25	40	10/16	25/40	10/16	25/40	10/16	25/40	10/16	25/40	10/16	25/40	10	16	25	40
ΦD	15.0	20.0	25.0	32.0	38.0	50.0	64.0		76.0		100.0		125.0		150.0		200.0		
L	115.0	120.0	125.0	130.0	140.0	150.0	170.0		180.0		190.0		325.0		350.0		400.0		
*L	130.0	150.0	160.0	180.0	200.0	230.0	290.0		310.0		350.0		400.0		450.0		550.0		
ΦC	45.0	58.0	68.0	78.0	88.0	102.0	122.0		138.0		158.0	162.0	188.0		212.0	218.0		268.0	278.0	285.0
ΦE	95.0	105.0	115.0	140.0	150.0	165.0	185.0		200.0		220.0	235.0	250.0	270.0	285.0	300.0		340.0	360.0	375.0
ΦB	65.0	75.0	85.0	100.0	110.0	125.0	145.0		160.0		180.0	190.0	210.0	220.0	240.0	250.0		295.0	310.0	320.0
f	2.0	2.0	2.0	2.0	3.0	3.0	3.0		3.0		3.0		3.0		3.0		3.0		
T	16.0	18.0	18.0	18.0	18.0	20.0	18.0	22.0	20.0	24.0	20.0	24.0	22.0	26.0	22.0	28.0		24.0	30.0	34.0
N	4.0	4.0	4.0	4.0	4.0	4.0	4.0	8.0	8.0		8.0		8.0		8.0		8.0		12.0	
Φh	14.0	14.0	14.0	18.0	18.0	18.0	18.0		18.0		18.0	22.0	18.0	26.0	22.0	26.0		22.0	26.0	30.0
H	48.0	53.0	64.0	71.0	76.0	85.0	104.0		114.0		140.0		183.0		202.0		253.0		
H1	79.0	84.0	95.0	103.0	111.0	120.0	153.0		163.0		182.0		260.0		280.0		non		
M	7.0	7.0	11.0	11.0	14.0	14.0	17.0		17.0		22.0		27.0		27.0		27.0		
K	7/16-24UNF	7/16-24UNF	9/16-18UNF	9/16-18UNF	3/4-18UNF	3/4-18UNF	7/8-14UNF		7/8-14UNF		1-1/8-12UNF		1-3/8-12UNF		1-3/8-12UNF		1-3/4-12UNF		
P	9.0	9.0	11.0	11.0	14.0	14.0	17.0		17.0		22.0		27.0		27.0		27.0		
A1	6.0	6.0	6.0	6.0	7.0	7.0	9.0		9.0		non		14.0		14.0		14.0		
A2	6.0	6.0	7.0	7.0	9.0	9.0	11.0		11.0		11.0		non		non		non		
B1	36.0	36.0	42.0	42.0	50.0	50.0	70.0		70.0		non		125.0		125.0		125.0		
B2	42.0	42.0	50.0	50.0	70.0	70.0	102.0		102.0		102.0		non		non		non		

3-PC FLANGE BALL VALVE FULL PORT
ISO-DIRECT MOUNTING PAD

PRODUCTS STANDARD
- ♦Blow-Out Proof Stem 防脱出阀杆
- ♦Investment Casting Body 精密铸造阀体
- ♦Full Port 全通径设计
- ♦Face to Face:ANSI B16.10/JIS B2002/DINPN16-40
- ♦ISO5211 Direct Mounting Pad 直装型平台设计
- ♦Fire-Safe Design Avavilable Acc:API 607 防火设计
- ♦Design Acc设计标准：ASME B16.34
- ♦Flange Standard:ASME 16.5/JIS B2220/DIN 2633
- ♦Inspection & Testing Acc 检测标准：API598
- ♦Seat:PTFE.Glass filled PTFE Carbon filled PTFE available8

Pressure-Temperature
Rating DN15~DN100

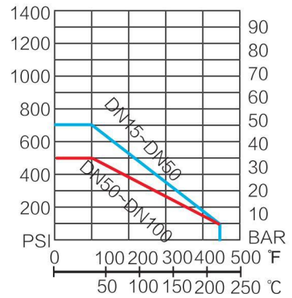

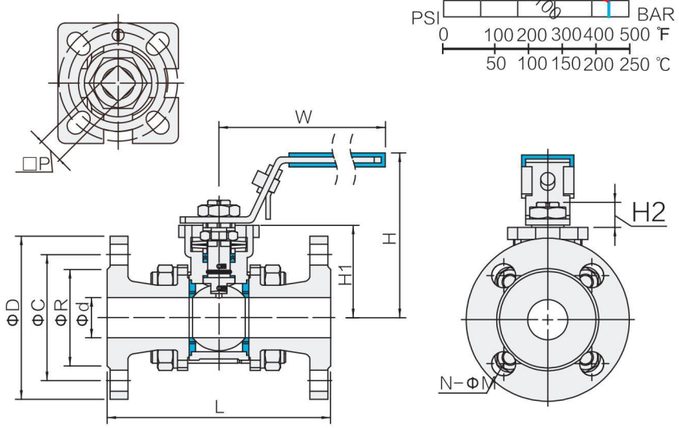

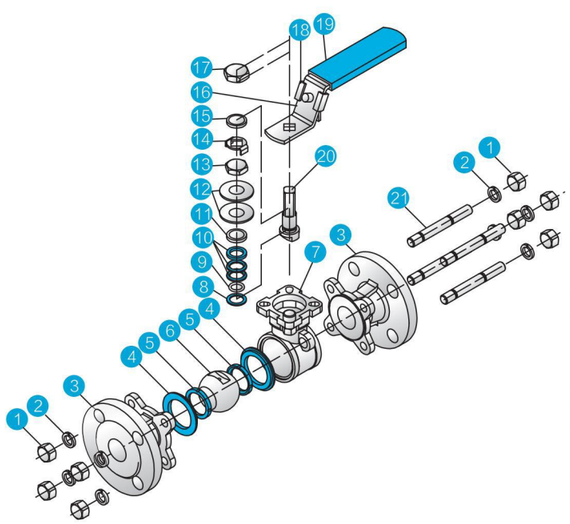

主要构件材料 Materials of Main Construction

Item No.	Part Name	Material		
1	Nut 螺母	SS304		
2	Spring Washer 弹簧垫圈	SS304		
3	Cap 阀盖	CF8M	CF8	WCB
4	Body Gasket 垫圈	PTFE	R-PTFE	
5	Ball Seat 阀座	PTFE	R-PTFE	
6	Ball 球	SS316	SS304	
7	Body 阀体	CF8M	CF8	WCB
8	Thrust Washer 止推垫圈	PTFE		
9	O-Ring O 型圈	VITON		
10	V-Ring Packing V型填料	PTFE		
11	Gland 压套	SS304		
12	Beleville Washer 蝶簧	SS304		
13	Stop Nut 止推螺母	SS304		
14	Stop Washer 止推垫圈	SS304		
15	Washer 垫圈	SS304		
16	Handle 手柄	SS304		
17	Stem Nut 阀杆螺母	SS304		
18	Locking Device 锁定装置	SS201		
19	Handle Cover 手柄皮套	Plastic		
20	Stem 阀杆	SS316		
21	Bolt 螺栓	SS304		

ANSI 150# unit:mm

Size	φd	L	H	H2	W	φR	φC	φD	□P	N-φM	T	F	Torque N.M	ISO 5211
1/2"	15	108	77	8	110	35	60.5	89	9	4-16	11.2	1.6	7	F03/F04
3/4"	20	117	89	8	110	43	70	98	9	4-16	11.2	1.6	9	F03/F04
1"	25	127	92	10	160	51	79.5	108	11	4-16	12.0	1.6	11	F04/F05
1-1/4"	32	140	97	10	160	64	89	117	11	4-16	12.7	1.6	18	F04/F05
1-1/2"	38	165	111	14	185	73	98.5	127	14	4-16	14.3	1.6	23	F05/F07
2"	50	178	120	14	185	92	120.5	152	14	4-19	15.9	1.6	28	F05/F07
2-1/2"	65	190	145	18	250	105	139.5	178	17	4-19	17.5	1.6	55	F07/F10
3"	78	203	156	18	280	127	152.5	190.5	17	4-19	19.1	1.6	90	F07/F10
4"	100	229	168	18	310	157	190.5	229	19	8-19	23.9	1.6	120	F07/F10

JIS 10K unit:mm

Size	φd	L	H	H2	W	φR	φC	φD	□P	N-φM	T	F	Torque N.M	ISO 5211
1/2"	15	108	77	8	110	51	70	95	9	4-15	12	1	7	F03/F04
3/4"	20	114	89	8	110	56	75	100	9	4-15	14	1	9	F03/F04
1"	25	127	92	10	160	67	90	125	11	4-19	14	1	11	F04/F05
1-1/4"	32	140	97	10	160	76	100	135	11	4-19	16	2	18	F04/F05
1-1/2"	38	165	111	14	185	81	105	140	14	4-19	16	2	23	F05/F07
2"	50	178	120	14	185	96	120	155	14	4-19	16	2	28	F05/F07
2-1/2"	65	190	145	18	250	116	140	175	17	4-19	18	2	55	F07/F10
3"	78	203	156	18	280	126	150	185	17	8-19	18	2	90	F07/F10
4"	100	229	168	18	310	151	175	210	19	8-19	18	2	120	F07/F10

DIN PN16 unit:mm

Size	φd	L	H	H2	W	φR	φC	φD	□P	N-φM	T	F	TORQUE N.M	ISO 5211
1/2"	15	130	77	8	110	45	65	95	9	4-14	14	2	7	F03/F04
3/4"	20	150	89	8	110	58	75	105	9	4-14	16	2	9	F03/F04
1"	25	160	92	10	160	68	85	115	11	4-14	16	2	11	F04/F05
1-1/4"	32	180	97	10	160	78	100	140	11	4-18	16	2	18	F04/F05
1-1/2"	38	200	111	14	185	88	110	150	14	4-18	16	3	23	F05/F07
2"	50	230	120	14	185	102	125	165	14	4-18	18	3	28	F05/F07
2-1/2"	65	290	145	18	250	122	145	185	17	4-18	18	3	55	F07/F10
3"	78	310	156	18	280	138	160	200	17	8-18	20	3	90	F07/F10
4"	100	350	168	18	310	158	180	220	19	8-18	20	3	120	F07/F10

WAFER BALL VALVE, FULL PORT, PN16-40
ISO-DIRECT MOUNTING PAD

PRODUCTS STANDARD
- ♦Blow-Out Proof Stem 防脱出阀杆
- ♦Investment Casting Body 精密铸造阀体
- ♦Full Port 全通径设计
- ♦Belleville Washer for Self-Adjustment 蝶簧中头填料自动调节
- ♦ISO5211 Direct Mounting Pad 带直装平台设计
- ♦Flange Standard法兰标准:DIN2633
- ♦Design Acc设计标准：ASME B16.34
- ♦Inspection & Testing Acc 检测标准：API 598
- ♦Seat:PTFE.Glass filled PTFE Carbon filled PTFE available

Pressure-Temperature Rating1/2"~4"

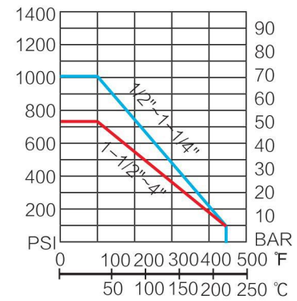

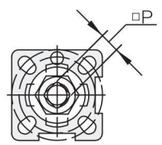

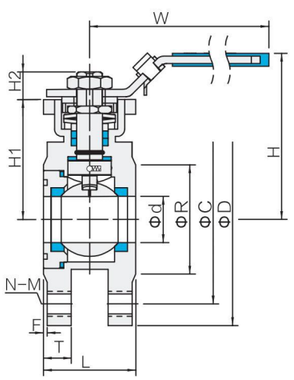

PN	Size	φd	L	H	H1	H2	φR	φC	φD	W	T	F	□P	N-M	ISO 5211	Torque N.M
16 — 40	1/2"	15	35	77	48.5	9	45	65	95	120	10	2	9	4-M12	F03/F04	4
	3/4"	20	42	85	54	9	58	75	105	120	12	2	9	4-M12	F03/F04	5
	1"	25	48	94	60	11	68	85	115	137	15	2	11	4-M12	F04/F05	5
	1-1/4"	32	55	104	72	11	78	100	140	187	15	2	11	4-M12	F04/F05	7
	1-1/2"	38	65	114	77	14	88	100	145	187	16	3	14	4-M16	F05/F07	9
	2"	50	75	120	86	14	102	125	160	187	18	3	14	4-M16	F05/F07	16
16	2-1/2"	65	95	160	108	17	122	145	180	315	18	3	17	4-M16	F07/F10	21
	3"	80	118	170	116	17	138	160	195	315	20	3	17	8-M16	F07/F10	25
	4"	100	140	182	138	17	162	190	215	315	20	3	19	8-M16	F07/F10	46

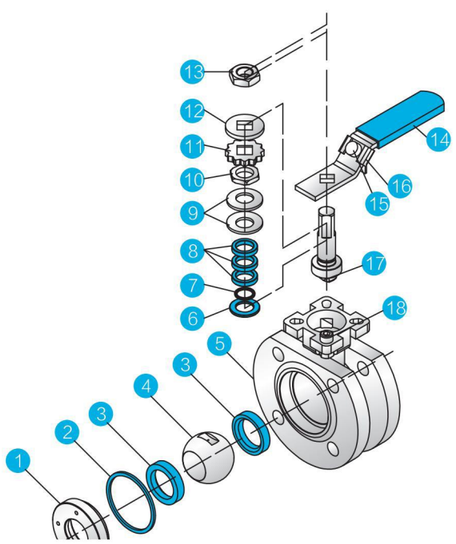

主要构件材料 Materials of Main Construction

Item No.	Part Name	Material		
1	Cap 阀盖	CF8M	CF8	WCB
2	Body Gasket 阀体密封	PTFE		
3	Ball Seat 阀座	PTFE		
4	Ball 球	SS316	SS304	
5	Body 阀体	CF8M	CF8	WCB
6	Thrust Washer 密封垫圈	PTFE		
7	O-Ring O型圈	VITON		
8	V-Ring Packing V型填料	PTFE		
9	Gland nut 压盖	SS304		
10	Belleville Washer 蝶簧	SS301		
11	Stop Nut 紧定螺母	SS304		
12	Washer 紧定垫圈	SS304		
13	Stem Nut 垫圈	SS304		
14	Handle cover 手柄皮套	SS304		
15	Handle 手柄	SS201		
16	Locking 锁定装置	SS201		
17	Stem 阀杆	SS316	SS304	
18	Locking bolt 定位螺栓	SS304		

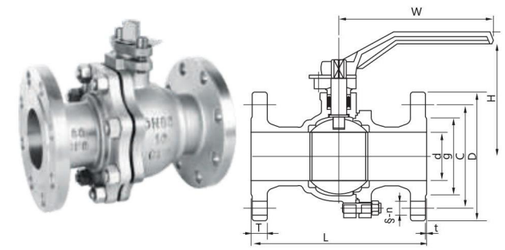

主要构件材料 Materials of Main Construction

序号 No.	部件 Part Name	材料 Material
1	阀体 Body	304/316
2	阀盖 Bonnet	304/316
3	阀座 Ball Seat	PTFE
4	球 Ball	304/316
5	大薄片 Gasket	PTFE
6	小薄片 Thrust Washer	PTFE
7	阀杆 Stem	304/316
8	填料 Packing	PTFE
9	压套 Gland	304
10	压板 Gland Flange	304
11	定位片 Lock Plate	304
12	轴用挡圈 Retainer Ring	304
13	手柄 Handle	Cast Iron铸铁
14	双头螺栓 Bonnet Bolt	304
15	螺母 Nut	304
16	内六角螺栓 Bonnet Bolt	304

执行标准 Compliance Standard

设计 Design	GB/T 12237
压力温度基准 Preeeure-Temperature Rating	GB/T 12224
结构长度 Face to Face	GB/T 12221
法兰尺寸 Flange Dimensions	JB/T 79.1-1994, GB/T 9113.1
检验和测试 Inspection & Testing	JB/T 9092
主体材料 Body Material	GB/T 12230-ZG08Cr18Ni9; ZG08Cr18Ni12Mo2Ti ; ZG03Cr18Ni10 ; ZG12Cr18Ni12Mo2Ti ; A216-WCB

主要尺寸 Dimensions

Unit:mm

公称压力 Nominal pressure	Size DN	d	L(JB)	L(GB)	D(JB)	D(GB)	C	g	T	t	H	w	n-ϕ
PN1.6 Mpa	15	15	108	130	95	95	65	46	14	2	60	108	4-14
	20	20	117	130	105	105	75	56	16	2	64	120	4-14
	25	25	127	140	115	115	85	65	16	2	90	165	4-14
	32	32	140	165	135	140	100	76	18	2	105	180	4-18
	40	40	165	165	145	150	110	84	18	2	150	240	4-18
	50	50	178	203	160	165	125	99	20	2	190	240	4-18
	65	65	190	222	180	185	145	118	20	2	195	320	4-18
	80	80	203	241	195	200	160	132	20	2	215	350	8-18
	100	100	305	305	215	220	180	156	22	2	250	400	8-18
	125	125	356	-	250	-	210	184	22	2	-	-	8-18
	150	150	394	-	285	-	240	211	24	2	-	-	8-22
	200	200	457	-	340	-	295	266	24	2	-	-	12-22
	250	250	533	-	405	-	355	319	26	2	-	-	12-26
	300	300	610	-	460	-	410	370	28	2	-	-	12-26
	350	350	686	-	520		470	435	34	2	-	-	16-25