1.Overview

GW9-10 (12) outdoor AC high-voltage disconnector is of single-pole structure. It is applicable to AC 50 Hz, rated voltage 10 (12) KV power system, and it is used as voltage no-load time division line. If it is required to be used in heavily polluted areas, products with pollution prevention grade of IV shall be selected.

The product conforms to the technical standard of 《AC High-voltage Disconnector and Grounding Switch》.

2.Model and definition

(H) G W 9 - 10 / 400A

- 400A — Rated current
- 10 — Rated voltage
- 9 — Design S/N
- W — Place of use (outdoor)
- G — Disconnecting switch
- (H) — Composite housing (ceramic column not marked)

3.Main Technical Data

Rated voltage (kV)	Rated current (kV)	Short-time withstand current (KA)	Rated insulation level			
			Lightning impulse withstand voltage		Power frequency withstand voltage	
			Pole to earth	Between fractures	Pole to earth	Between fractures
10(12)	40	12.5	75	85	42	48
10(12)	630	20				
10(12)	1000	25				
10(12)	1250	25				

4. Service environment

4.1 The altitude shall not exceed 1000M;

4.2 The maximum temperature of surrounding medium shall not exceed+40 ℃ and the minimum temperature shall not exceed - 30 ℃;

4.3Places without explosion hazard, dirt, chemical corrosive gas and violent vibration.

4.4The seismic intensity shall not exceed 8 degrees

5.Structure description

GW9 disconnector is designed as single-pole structure, which is easy to use and cheap when conducting hierarchical control in three-phase line.

The product is composed of post insulator and mounting base of conductive part (contact knife and contact base).

The disconnector is of knife gate structure, and the single-pole is composed of two contact blades. Compression springs are installed near the contact base at both ends of the contact blade, and adjusting nuts are provided to form good contact pressure. The knife is equipped with hook plates, which are self-locking after closing. Therefore, it will not automatically open under the action of its own dead weight, vibration force, etc., and its stability can be guaranteed under normal operation or short circuit conditions

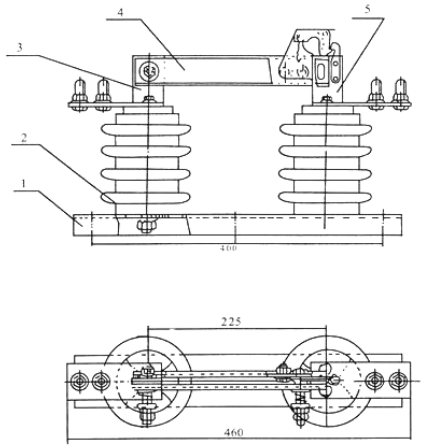

1.Base 2. Post insulator 3. Moving contact
4. Contact blade 5. Static contact

5.Instructions for ordering:

It must be noted when ordering:

1.Product name, model and specification;

2.Use environment is ordinary or plateau type;

3. Whether spare parts or accessories are required;

4.For other special requirements, please contact us.