ANDELI

GN30-12

Operation Instructions

ANDELI GROUP CO.,LTD.

1.Scope of application

1. 1 GN30-12 series indoor high-voltage rotary isolating switch (hereinafter referred to as isolating switch) is indoor device with rated voltage of 12KV and three-phase AC of 50Hz. Plateau type does not include 2000 and 3150A, the same below)

Service environmental conditions:

a、 The altitude shall not exceed 1000m (ordinary type, large creepage distance)；

b、 Ambient temperature not higher than+40 ℃: not lower than - 10 ℃；

c、 The monthly average relative humidity is not more than 90%.；

1. 2 Disconnector is not applicable to:

a、 Places with gas, water vapor, chemical deposition, salt mist, dust, dirt and explosive and corrosive substances that seriously affect the insulation and conductivity of isolating switch.

b、 Places with frequent violent vibration.

See the attached table for main specifications and technical parameters

2.Main structure and characteristics

GN30-12/630, 1000, 1250, 2000 and 3150 disconnectors are a new type of rotary knife disconnectors. The main body of the switch is fixed on the upper and lower planes of the switch chassis by two groups of insulators. The upper and lower planes are completely separated by the partition plate fixed on the switch chassis. The switch is closed and opened by rotating the contact knife.

GN30-12D/630, 1000, 1250, 2000 and 3150 disconnectors are provided with earthing knife-switch on the basis of original switch, which can meet different requirements of switch cabinet. The contacts are respectively installed on the upper and lower sides of the switch, so that the live part and the dead part are completely separated in the switch cabinet, so as to ensure the absolute safety of workers during maintenance.

The conductive part is mainly composed of contact knife and contact. The contact knife is fixed in the rotating porcelain bushing by two copper plates, and a magnetic lock plate is added to strengthen the rigidity of the contact knife. The high-current conductive part above 2000A is mainly composed of epoxy resin cast conductive tube, contact finger and contact base. The contact finger is fixed on the contact base from both sides, and the spring pressure is added to make the contact more secure, so that it has good dynamic and thermal stability when passing through the short circuit current.

The contact mode of GN30-12/630, 1000, 1250A contact knife to the contact adopts the arc surface wire contact: the contact finger of GN30-1212000, 3150 to the contact base adopts the spherical wire contact, and the conductive tube and the contact finger adopt the wire contact, reducing the process difficulty during assembly and ensuring good contact.

The switch can be operated by JSXGN-10 box-type mechanical locking or by a self-designed mechanism.

Schedule 1

S/N	Switch model	Rated voltage (KV)	Rated working current (A)	Peak value of dynamic stable current (KA)	4s thermal stability current (KA) effective value
1	GN30-12(D)/630-20		630	50	20
2	GN30-12(D)/1000-31.5		1000	80	31.5
3	GN30-12(D)/1250-40	12	1250	100	40
4	GN30-12(D)/2000-40		2000	100	40
5	GN30-12(D)2500-40		3150	100	40

See Fig. 1, Fig. 2, Fig. 3 and Fig. 4 for isolation of switch installation form; See Fig. 5, Fig. 6, Fig. 7, Fig. 8, Fig. 9 and Fig. 10 for lower isolation; See Fig. 13 for the connection hole size of switch and busbar.

See Fig. 14 and Fig. 16 for GN30-1213150 indoor high-voltage rotary isolating switch;

see Fig. 15 for GN30-12D/2000 indoor high-voltage rotary isolating switch.

3 Installation and adjustment

3.1 Preparations before installation:

Open the packing box, and check whether the spare parts and attached technical documents of the product are complete according to the "packing list", and check whether the product is damaged during transportation and storage.

3.2 Remove the dust and dirt in the product, and carefully wipe the dust on the insulator and the underframe.

3.3 Check whether the main shaft screw of the switch is loose, whether the porcelain bottle and contact are dislocated during transportation, and if so, they shall be corrected.

3.4 Apply industrial Vaseline on all mechanical friction parts.

3.5 The switchgear can be vertically and horizontally installed in the cabinet or on the wall according to the required position

3.6 When determining the position of isolating switch, noted that the insulation distance between the live part and the ground shall not be less than 125mm when the switch is in the opening and closing position; the insulation distance between the plateau type and the ground shall not be less than 160mm.

3.7 When the switch is connected with the operating mechanism, the opening/closing position mark of the mechanism shall be consistent with the opening/closing state of the switch.

3.8 Connect the connecting lever between the isolating switch and the operating mechanism, drill holes and drive the pull pin after the switch is adjusted.

3.9 The disconnector shall be operated for 3-5 times after connection and adjustment with the mechanism, and no clamping or other abnormal phenomenon hindering the action is allowed.

3.10 When the isolating switch is switched off, the minimum fracture distance shall not be less than 125mm; for plateau type, it shall not be less than 160mm.

3.11 The switch has no locking device, and the positioning locking shall be designed on the mechanism.

3.12 If the auxiliary switch is required to be installed, the auxiliary switch shall indicate the opening signal when the disconnector contact blade passes through its full strokeAnd the closing signal shall be sent out after the contact knife enters the contact.

3.13 The contact knife and contact shall be in good contact, and the contact pressure can be indirectly measured by the elastic compression size.

3.14 The contact between the disconnector and the bus connection must be good, fixed and reliable, so as to prevent the disconnector from being affected by the mechanical force transmitted from the direction of the bus.

3.15The embedded depth of the screws fixing the partition on the wall shall not be less than 120mm, and the depth of the cement wall shall be 80mm. The installation method of the isolating switch in the cabinet is shown in Figure 11.

4 Use and maintenance

4.1 The isolating switch must be maintained only when the circuit and current are cut off, i.e. the switch is not electrified.

4. 2 Do not switch off with load.

4. 3 During maintenance, the bushing insulator, tension washer of fixed contact knife and post insulator shall be inspected in detail, and the grounding part shall be inspected to see whether they are in good condition without looseness.

4.4 When repairing the burnt part of the contact blade, do not file the bottom with a file, and only gently sand it with abrasive paper.

4. 5 Check the mutual position of the contact and the contact knife, and the spring deformation. If the contact knife and the contact are found to be out of position, they shall be adjusted in time, and the spring deformation shall be replaced.

4. 6 Apply lubricating grease to all rotating parts and apply industrial vaseline to all conductive friction parts after maintenance.

4. 7 Conduct several opening and closing tests after all maintenance, and put into operation after all tests are normal.

5 Ordering Instructions

5. 1 When ordering, the product model and whether the mechanism is required shall be indicated in detail.

5. 2 If there are special requirements, please indicate and attach figures.

5. 3 Incoming and outgoing line mode: vertical incoming and outgoing line shall be adopted for wiring terminal and mounting surface of switch underframe, and horizontal incoming and outgoing line shall be adopted for wiring terminal and mounting surface of switch underframe.

5.4 Operating direction: facing the front of the switch cabinet, the operating mechanism is operated left at the left and right at the right (all listed figures in this manual are operated left)

6. Installation Dimension Table (A and B are installation dimensions, C, D, E and F are overall dimensions)

Model \ Distance P / Size	275 A	275 B	275 C	275 D	275 E	275 F	250 A	250 B	250 C	250 D	250 E	250 F	230/210 A	230/210 B	230/210 C	230/210 D	230/210 E	230/210 F	Remarks
GN30-12/630	760	300	282 Parallel incoming line 363 Vertical incoming line	510 two parallel 575 one parallel vertical 655 two vertical	400	870	760	300	282 Parallel incoming line 363 Vertical incoming line	510 two parallel 575 one parallel vertical 655 two vertical	400	900	680	300	282 Parallel incoming line 363 Vertical incoming line	510 two parallel 575 one parallel vertical 655 two vertical	400	810	The mounting hole size is 4-14x241 The mounting hole size is 4-14x241, the disconnecting distance of isolating knife is ≥ 125; Plateau type ≥ 160; 2. Disconnection distance of grounding knife ≥ 125; Plateau type ≥ 160;
GN30-12/1000																			
GN30-12D/630																			
GN30-12D/1000																			
GN30-12D/1250																			
GN30-12/1250																			
GN30-12G/630				Dimensions D+60 above	450 open the ground disconnector					Dimensions D+60 above	450 open the ground disconnector					Dimensions D+60 above	450 open the ground disconnector		
GN30-12G/1000																			
GN30-12G/1250																			
GN30-12DG/630																			
GN30-12DG/1000																			
GN30-12DG/1250																			
GN30-12/2000	810		375	660	515	978 Shaft head at both ends													
GN30-12/3150					⏚ 700														
CN30-12D/2000					open														
CN30-12D/3150																			

7. Installation form

7.1 Upper isolation

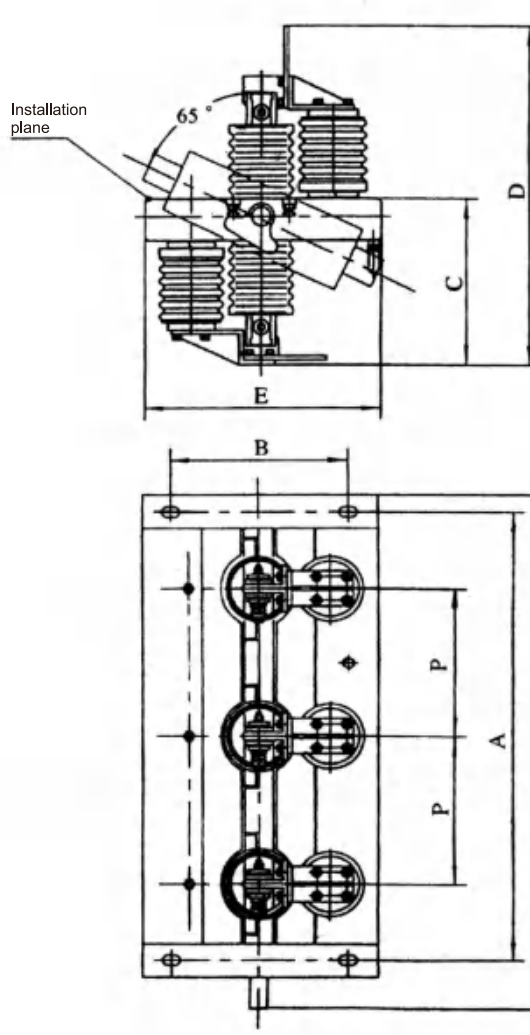

Figure 1 GN30-12/630，1000 Upper isolating switch (vertical incoming line and parallel outgoing line)

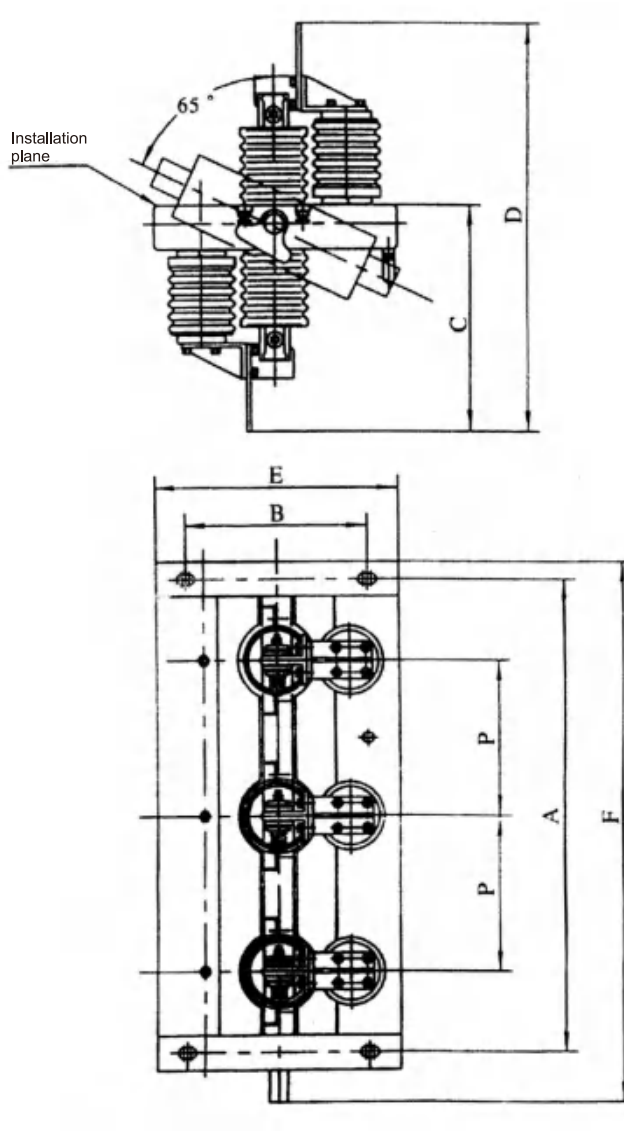

Figure 2 GN30-12/630、1000 Upper isolating switch
(vertical incoming line and vertical outgoing line)

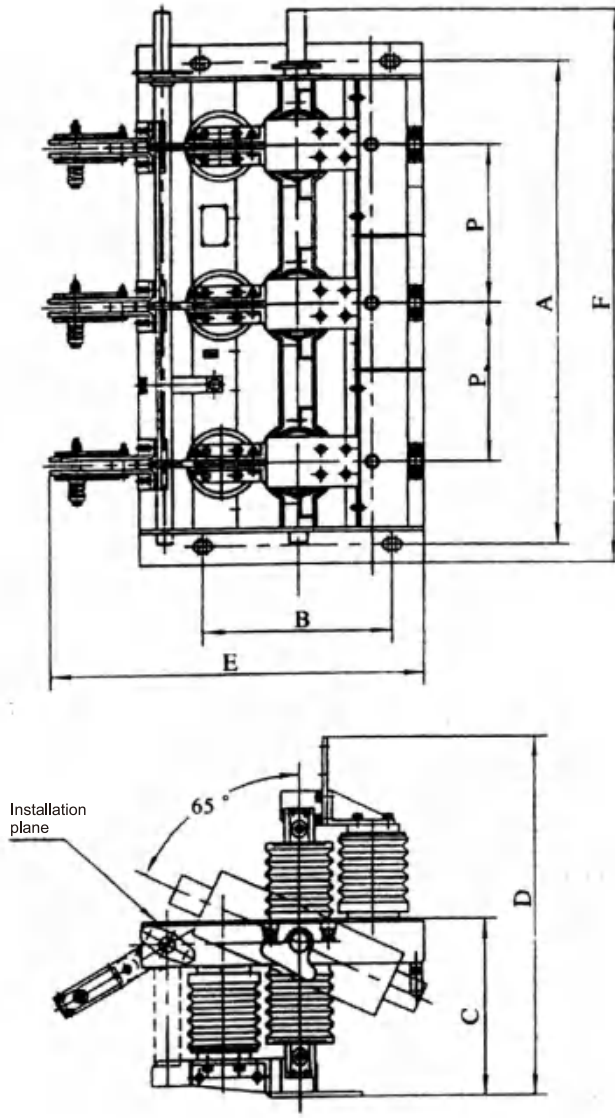

Figure 3 GN30-12D/630、1000 Upper isolating switch
(vertical incoming line and vertical outgoing line)

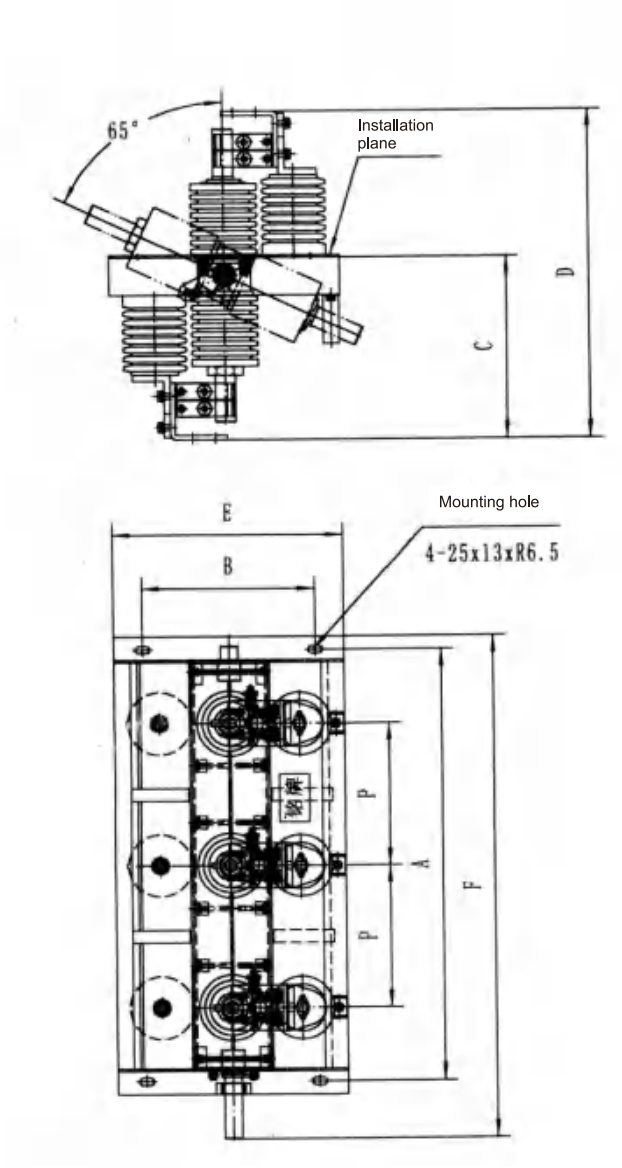

Figure 4 GN30-12/1250 Upper isolating switch
(vertical incoming line and vertical outgoing line)

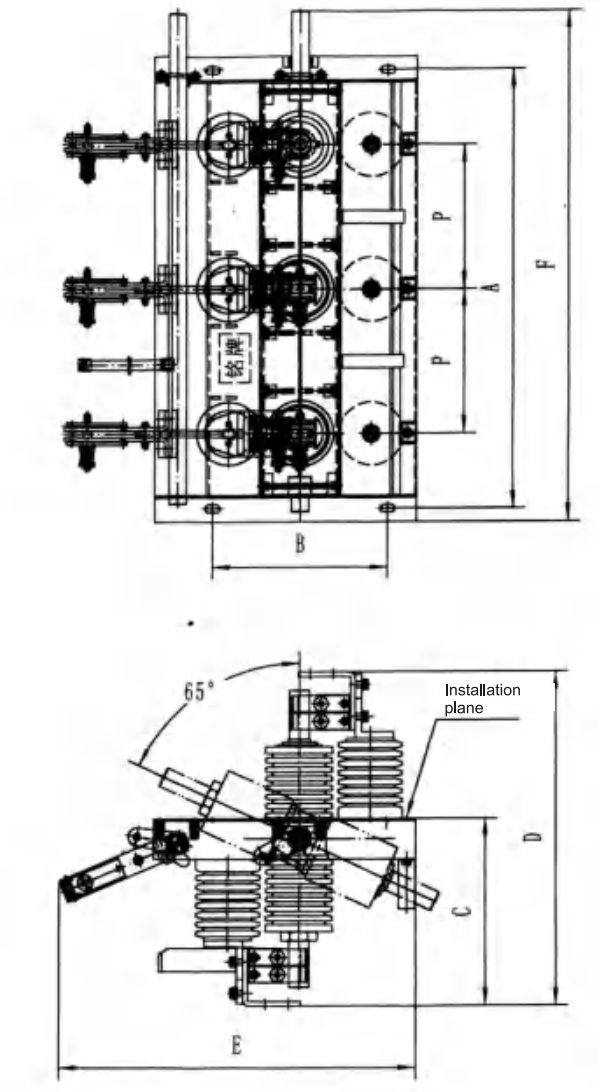

Figure 5 GN30-12D/1250A Upper isolating upper earthing switch
(parallel incoming line and parallel outgoing line)

7.1 Down isolation

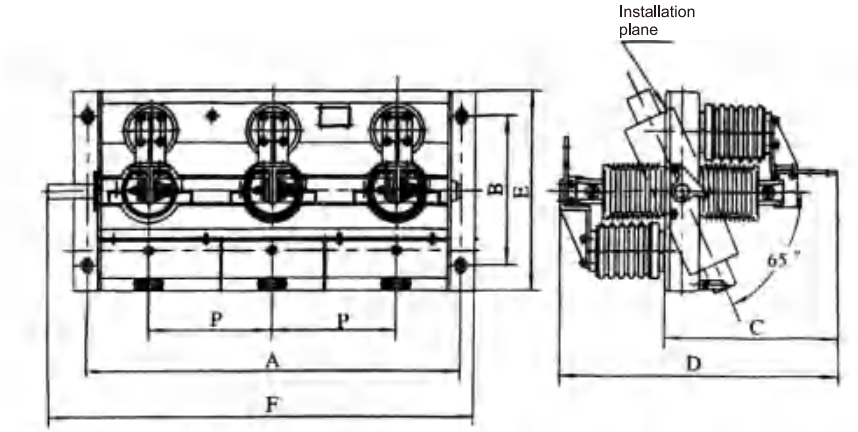

Figure 6 GN30-12/630、1000 Lower isolating switch
(vertical incoming line and parallel outgoing line)

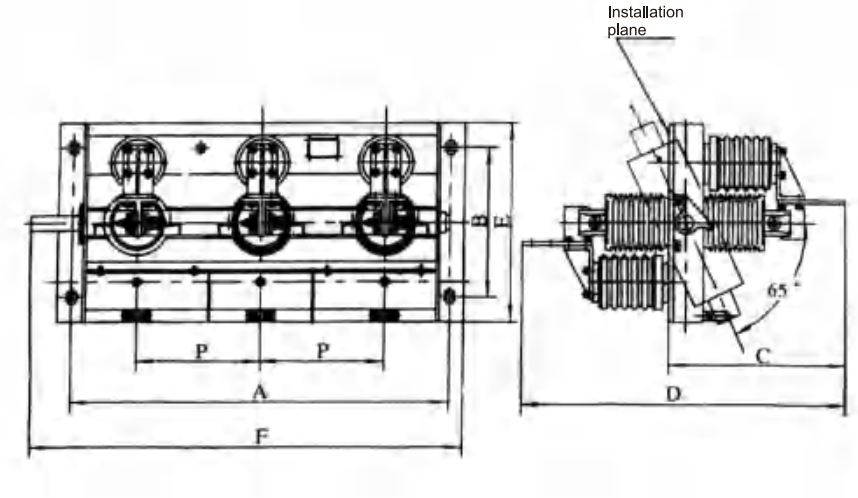

Figure 7 GN30-12/630、1000 Lower isolating switch
(vertical incoming line and parallel outgoing line)

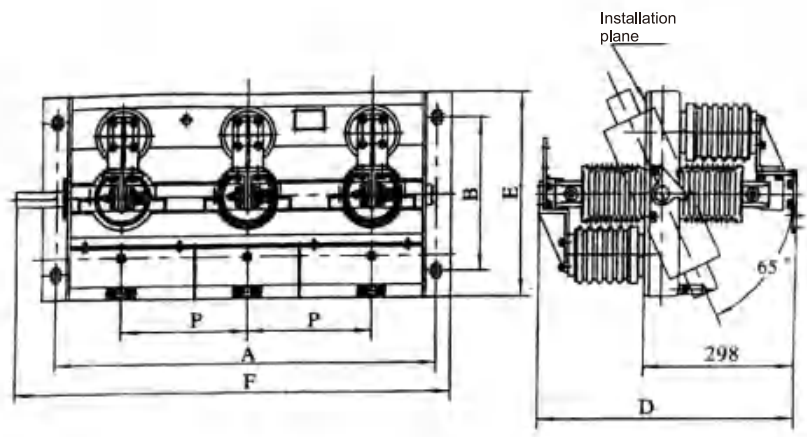

Figure 8 GN30-12/630、1000 Down isolating switch
(vertical incoming line and parallel outgoing line)

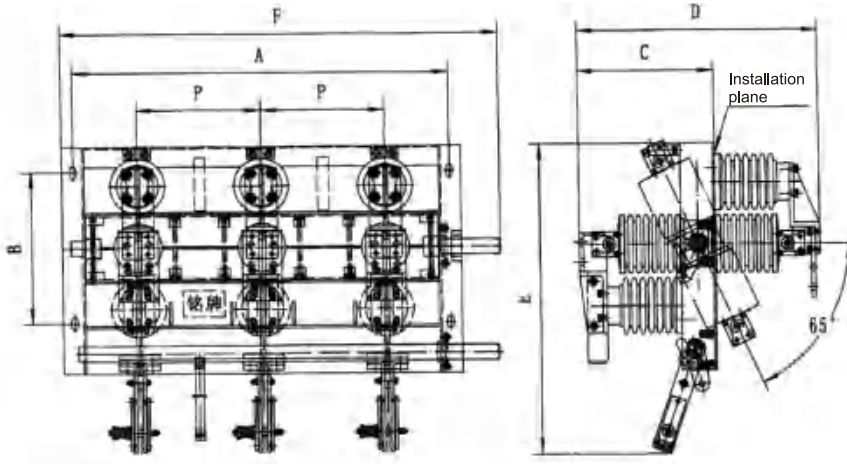

Figure 9 GN30-12/630、1000 Down isolating switch
(vertical incoming line and parallel outgoing line)

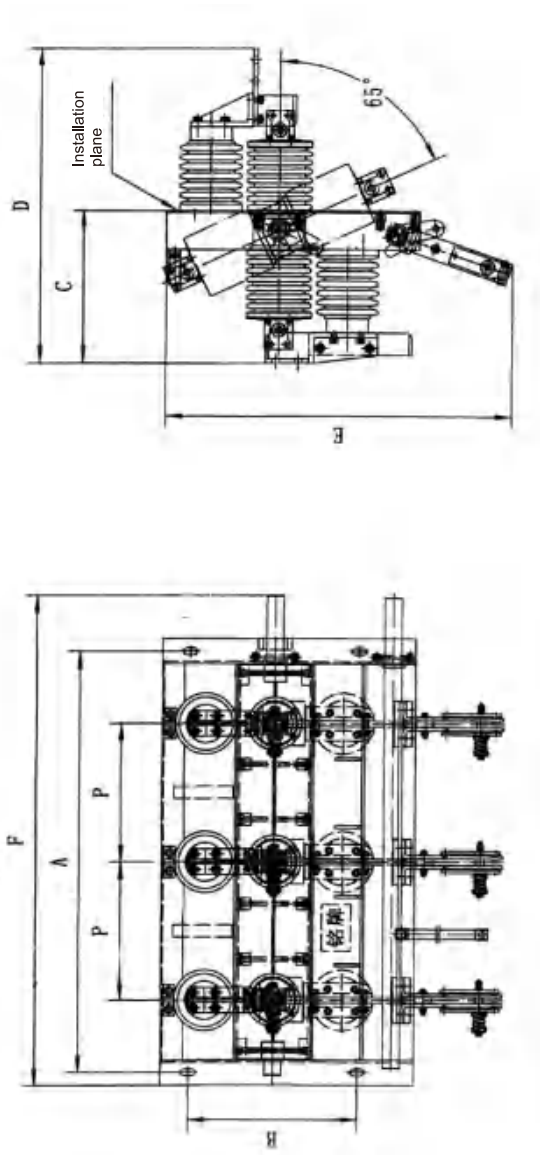

Figure 10 GN30-12/630A, 1000A Down isolating lower earthing switch (vertical incoming line and parallel outgoing line)

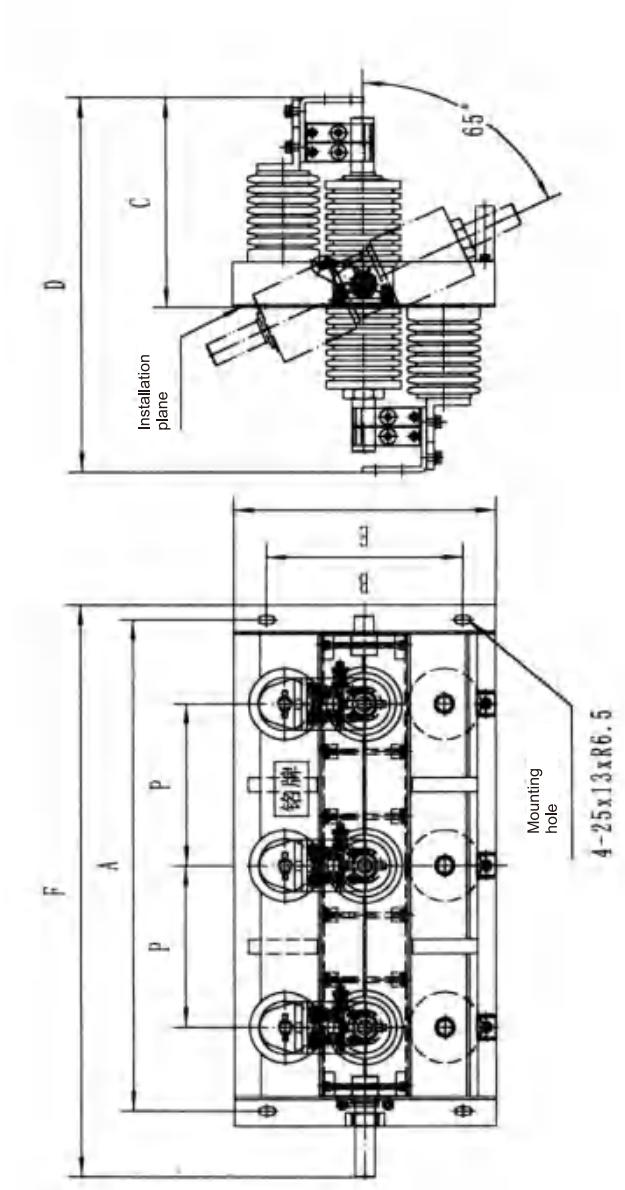

Figure 11 GN30-12/1250A, Down isolating lower earthing switch (vertical incoming line and parallel outgoing line)

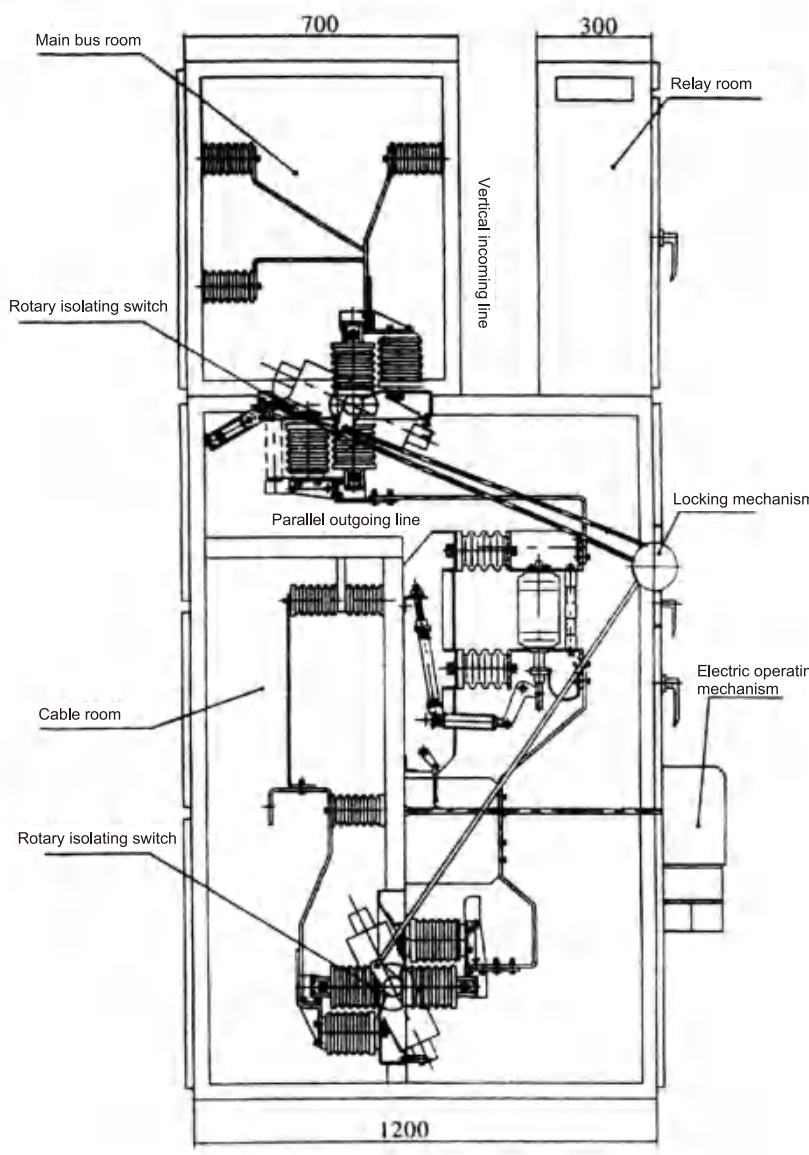

Fig. 12 Assembly Drawing of Box Cabinet XGN2-12

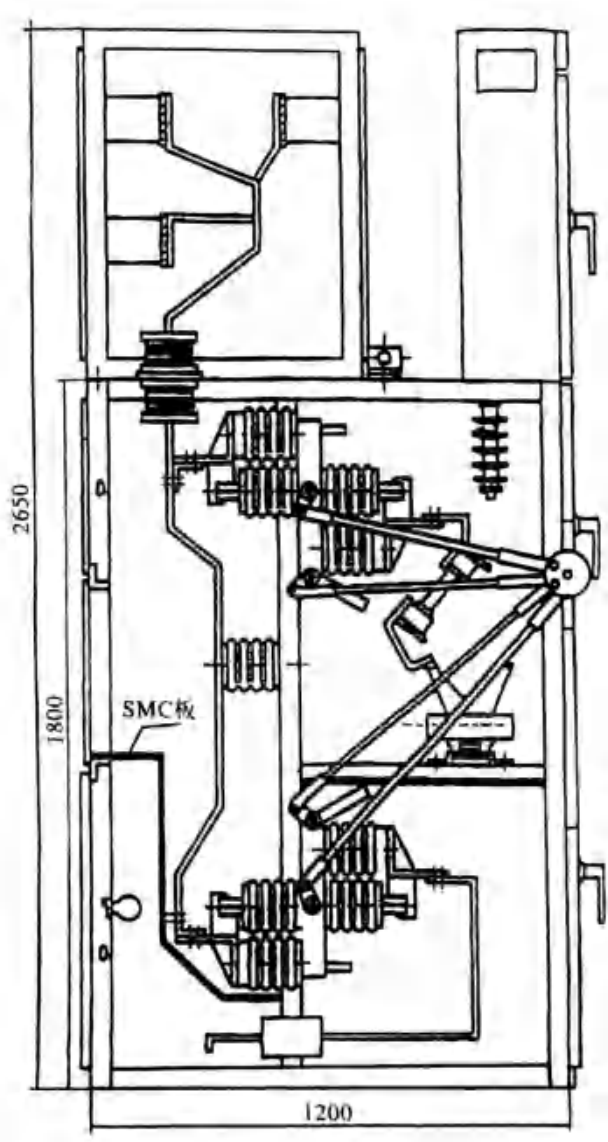

Fig. 13 Left view of switch cabinet with special requirements

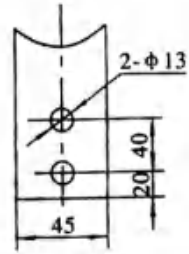

GN30-12/630

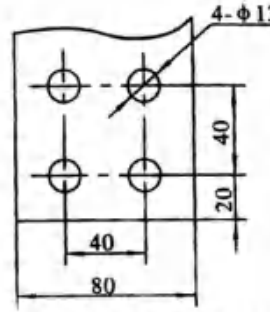

GN30-12/1000、1250

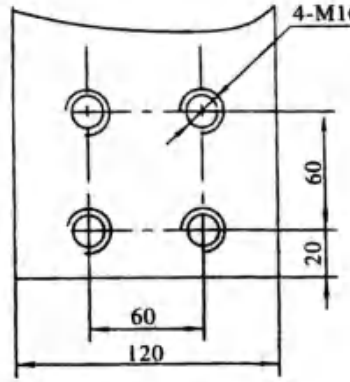

GN30-12/2000、3150

Fig. 14 Connection dimensions of switch and busbar

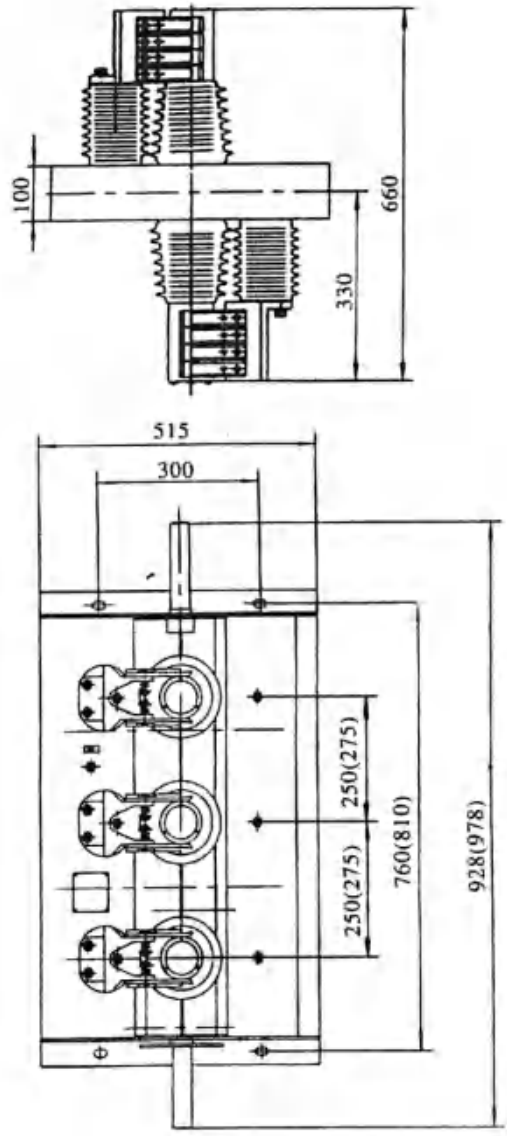

Fig. 15 GN30-12/3150 Indoor High-voltage Rotating Disconnector

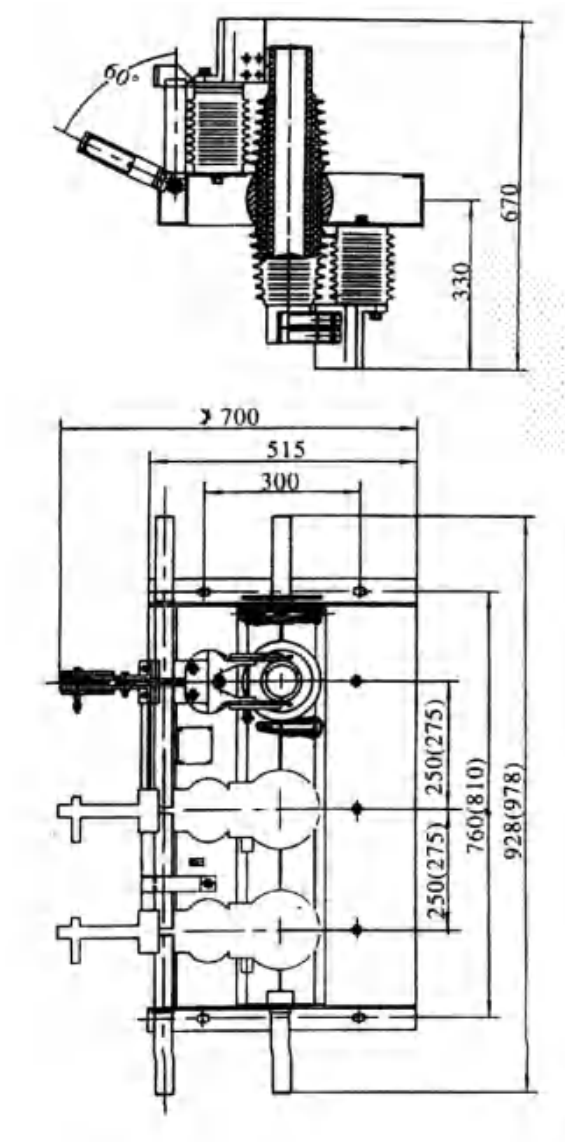

Fig. 16 GN30-12D/2000 Indoor High-voltage Rotating Disconnector

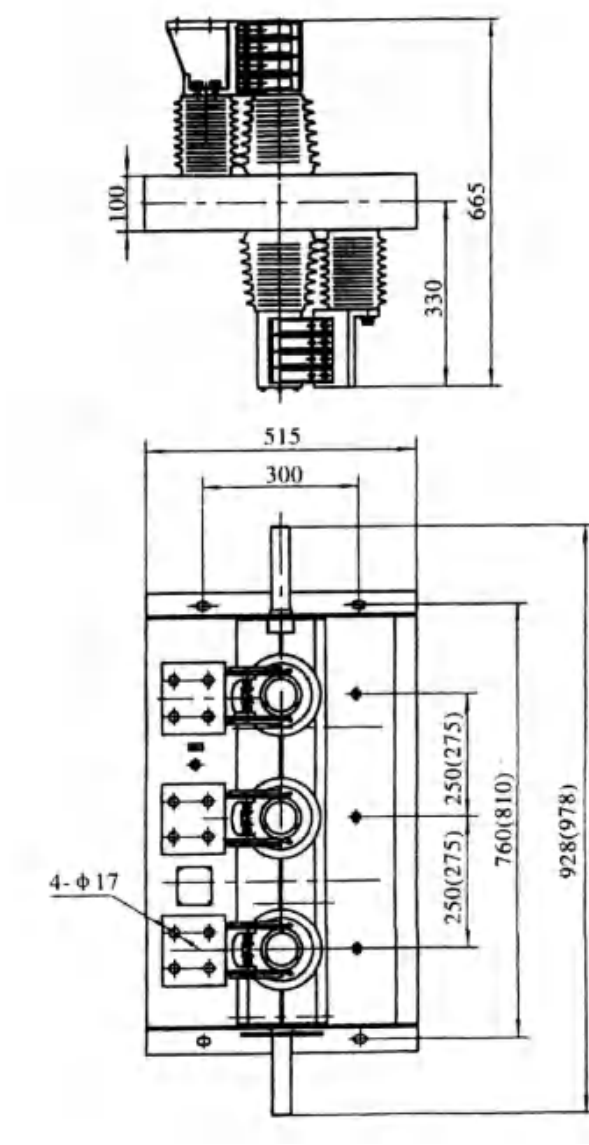

Fig. 17 GN30-12/3150 Indoor High-voltage Rotating Disconnector
(Horizontal Incoming Line and Vertical Outgoing Line)