ANDELI

ZW7-40.5

ZW7-40.5 Series Outdoor High Voltage Vacuum Circuit Breaker

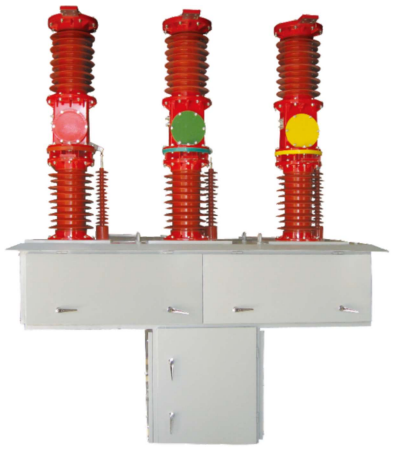



1. Application

ZW7-40.5 series outdoor high voltage vacuum circuit breaker is used at three phase AC 50Hz, rated voltage is 40.5kV outdoor high-voltage electrical equipment,attached the spring operator or electromagnetic actuator can be well controlled electric opening and closing can also be Manaul storage, manually open and close. Design performance meet GB1984-89 <AC high voltage circuit breakers>; national standards, and meet the IEC-56 <high voltage AC circuit breakers> ; International Electro-technical Commission standards. ZW7-40.5 series vacuum circuit breaker is mainly used for outdoor 35kV power transmission system control and protection also applies to urban and rural power distribution networks and industrial and mining enterprises in the normal operation and short circuit protection purposes. The overall structure of the insulator pillar product type; built vacuum interrupter type on the case, porcelain vase for the next pillar case. For frequent operation place. And has good sealing, anti-aging, high pressure, no burning, no explosion, long life, convenient installation and maintenance features.

2. Type and Meaning

Z W 7 - 40.5 / □ - □

- Rated short circuit breaking current
- Rated current
- Rated voltage
- Design No.
- Outdoor
- Vacuum circuit breaker

3. Technical Parameter

No.	Item	Unit	Value		
1	Rated voltage	KV	40.5		
2	Rated current	A	1600		
3	Rated frequency	Hz	50		
4	Rated short-circuit breaking current(valid)	kA	20	25	31.5
5	Rated short-circuit making current(peak)	kA	50	63	80
6	Rated peak withstand current	kA	50	63	80
7	4S Rated short time tolerance current	kA	20	25	31.5
8	1 min power frequency withstand voltage(valid)	kV	dry-type:95 (wet-type:80)		
9	Lightning shock pressure(peak)	kV	185		
10	Rated operating sequence		Part-0.3S- Joint points -180S- Joint points		
11	Rated short open circuit current switch frequency	times	20		
12	Operating mechanism rated switching voltage	times	10000		
13	weight	kg	1000		

4. Main Mechanical Parameters

No.	Item	Unit	Value
1	Arcing chamber contact clearance	mm	22±2
2	Arcing chamber Super stroke	mm	5±1
3	Phases center distance	mm	710
4	Arcing chamber Contact switching bounce time	ms	≤5
5	Three phase points, closing not synchronism	ms	≤2
6	Average closing speed	m/s	0.75±0.2
7	Average opening speed	m/s	1.7±0.2
8	Closing time	ms	30~100
9	Opening time	ms	15~60
10	Each phase main loop resistance(without CT)	μΩ	≤100
11	Action contact allowed to wear accumulative thickness	mm	3

5. Outline and Installation Dimension (mm)

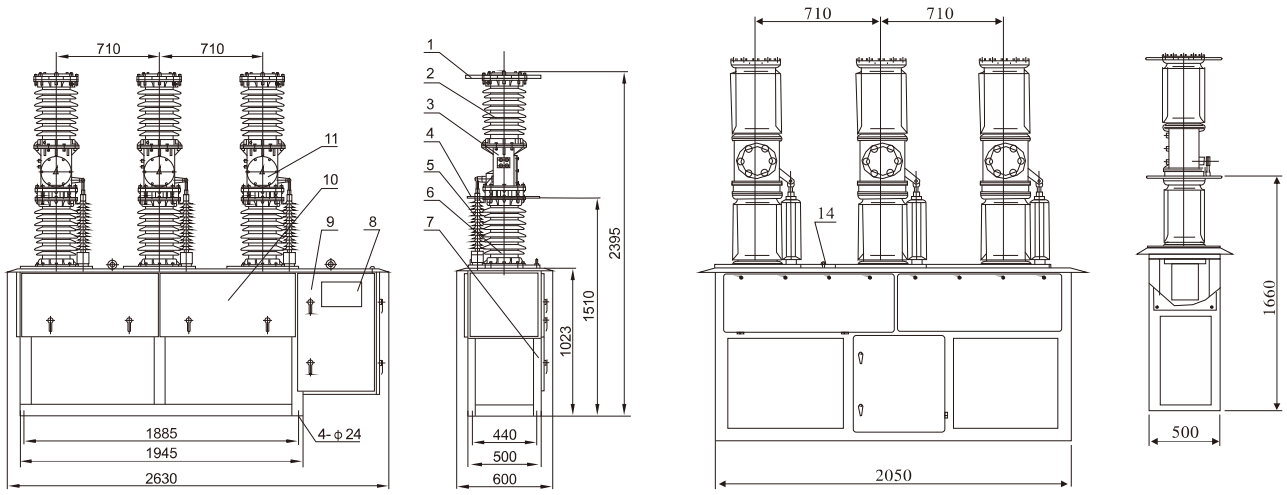

1. Upper terminal
2. Vacuum arcing chamber porcelain sets
3. Holder
4. Under against terminal
5. Insulating tension pole
6. Strut porcelain
7. Chassis
8. Nameplate
9. CT19BW framework box
10. CT
11. Hand hole cover board