ZN63(VS1)-12 High Voltage Vacuum Circuit Breaker



1. Application

ZN63(VS1)-12 indoor high voltage vacuum circuit breaker is used in the three-phase AC power system of frequency 50Hz, rated voltage 12kV. It is applied in the grid equipment, the power distribution system of industrial and mining enterprises as well as the places where requires repeated opening short-circuit current and frequent operation.

This circuit breaker adopts unibody design of operating mechanism and circuit breaker technology, which can not only be used as fixed installation unit, but also can constitute the handcart unit with dedicated advanced mechanism.

ZN63(VS1)-12 is indoor medium-voltage solid type seal vacuum circuit breaker, ZN63(VS1)-12 vacuum breaker suitable for the insulation in the indoor air switch for 50Hz, rated voltage 12kV and below the grid from the control and protection, ZN63(VS1)-12 vacuum circuit breaker and the frequent need for short-circuit breaking current of occasions with very good performance, fully meet the requirements of automatic re-closing and have higher reliability and service life.



2. Technical Parameter

No.	Item		Unit	Value		
1	Rated voltage		kV	12		
2	High test operating voltage		kV	12		
3	Rated current		A	630	630	1250
4	Rated short-circuit breaking current		kA	20	25	31.5
5	Rated short-circuit closing current		kA	50	63	80
6	Rated peak withstand current		kA	50	63	80
7	4Srated short time withstand current		kA	20	25	31.5
8	Rated insulation level	P.F.withstand voltage(Before and after the rated breaking)	kV	42(Fracture48)		
		Impulse witstand voltage(Before and after the rated breaking)	kV	75(Fracture84)		
9	Rated operating order			O-0.3S-CO-180S-CO		
10	Mechanical life		times	3000		
11	Rated short-circuit breaking current breaking times		times	50		
12	Actuator Rated closing voltage(DC)		V	110,220		
13	Actuator Rated opening voltage(DC)		V	110,220		
14	Clearance between opencontacts		mm	11±1		
15	Supper Travel(Compressed length of contact springs)		mm	3.5±0.5		
16	Non corresponding time period between tri-phase opening and closing		ms	≤2		
17	Bounce time of closing contacts		ms	≤2		
18	Average time of opening		s	0.9~0.12		
19	Average time of closing		s	0.4~0.8		
20	Opening time		ms	50		
21	Closing time		ms	100		
22	Main loop resistance of each phase		μΩ	60	50	
23	Allowed acumination thickness between moving contact and static contact		mm	3		



3. Outline and Installation Dimension (mm)



Vacuum circuit breaker with chassis

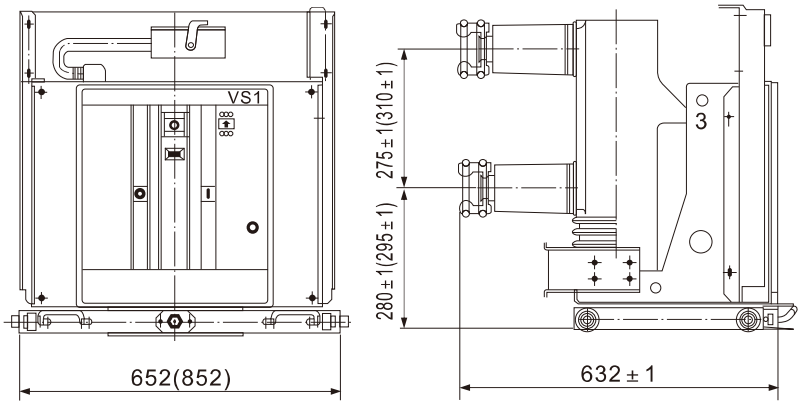

Vacuum circuit breaker without chassis

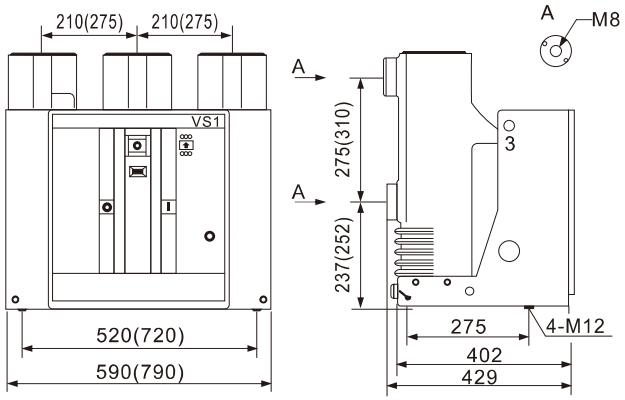

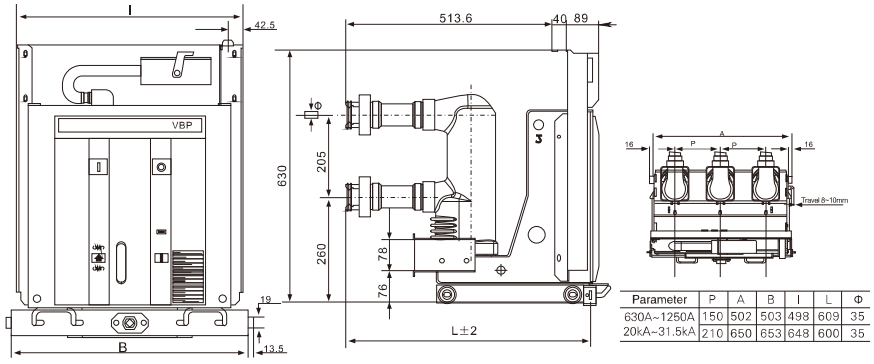

Parameter	P	A	B	I	L	Φ
630A~1250A	150	502	503	498	609	35
20kA~31.5kA	210	650	653	648	600	35

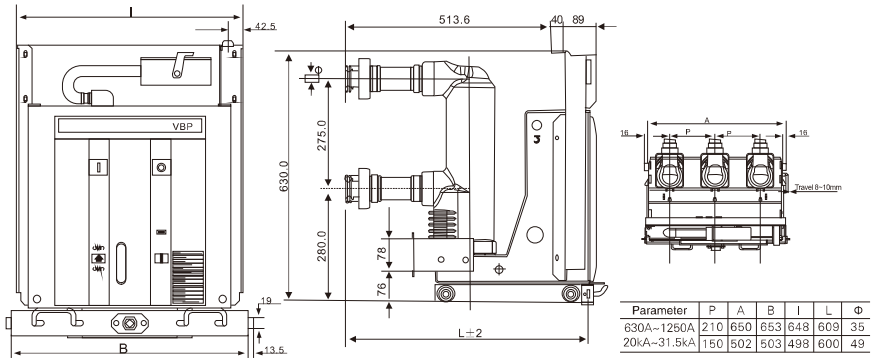

Parameter	P	A	B	I	L	Φ
630A~1250A	210	650	653	648	609	35
20kA~31.5kA	150	502	503	498	600	49

