LZZBJ9-10 Type Current Transformer

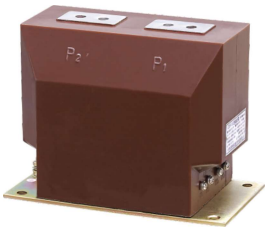

1. Type and Meaning

L Z Z B J 9 - 10 A,B,C

- Structure
- Rated voltage(kV)
- Design No.
- Strengthen
- With protective class
- Cast-resin insolated
- Seat type
- Current transformer

2. Specification

Type	Rated transformation ratio(A)	Accuracy Classes combination	Accuracy class and rated output COSØ=0.8				1s thermal current(kA)	Rated dynamic current(kA)
			0.2S	0.2	0.5	10P15		
	5/5	0.2S/0.5	10	10	10	15	0.8	1.9
	10/5	0.2S/0.25					1.5	3.8
	15/5	0.2S/10P15					2.3	5.8
	20/5	0.2/10P15					3	7.5
LZZBJ9-10A1G	30/5	0.5/10P15					4.5	11.2
	40/5	0.2/0.5/10P15					6	15
LZZBJ9-10B	50/5	0.2S/0.5/10P15					7.5	18.8
LZZBJ9-10C	75/5	0.2S/10P20					11.5	29
	100/5	0.2/10P20					15	37.5
	150-200/5	0.5/10P20					22.5	56.5
	300-600/5	0.2S/10P30					45	112.5
	800-2500/5	0.5/10P30					63	157.5

Note: any special requirements can be negotiated with us,thermal and heat both stable,we can customized your requirement.

3. Outline and Mounting Dimension

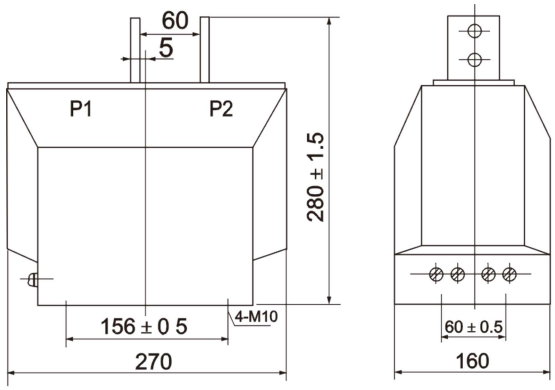

LZZBJ9-10

ANDELI

LZZBJ9-10

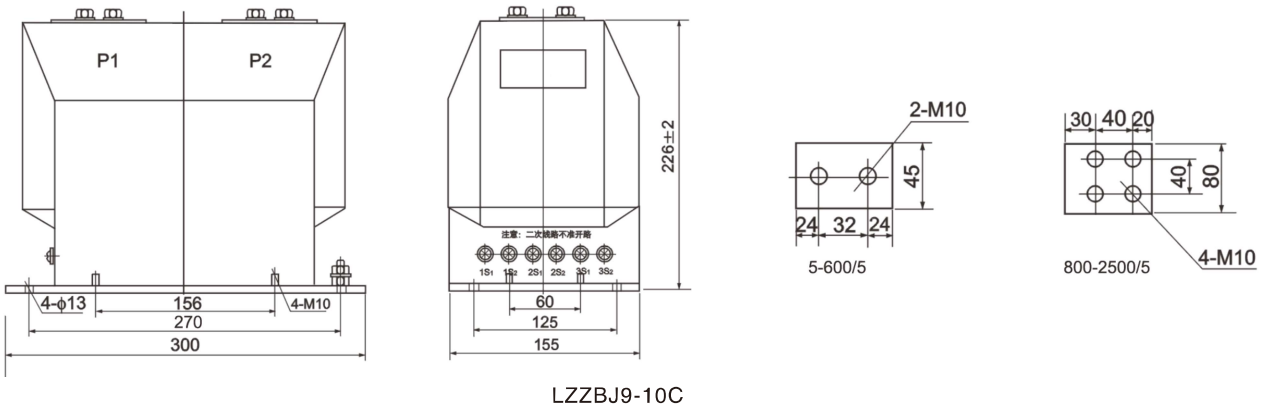

LZZBJ9-10C

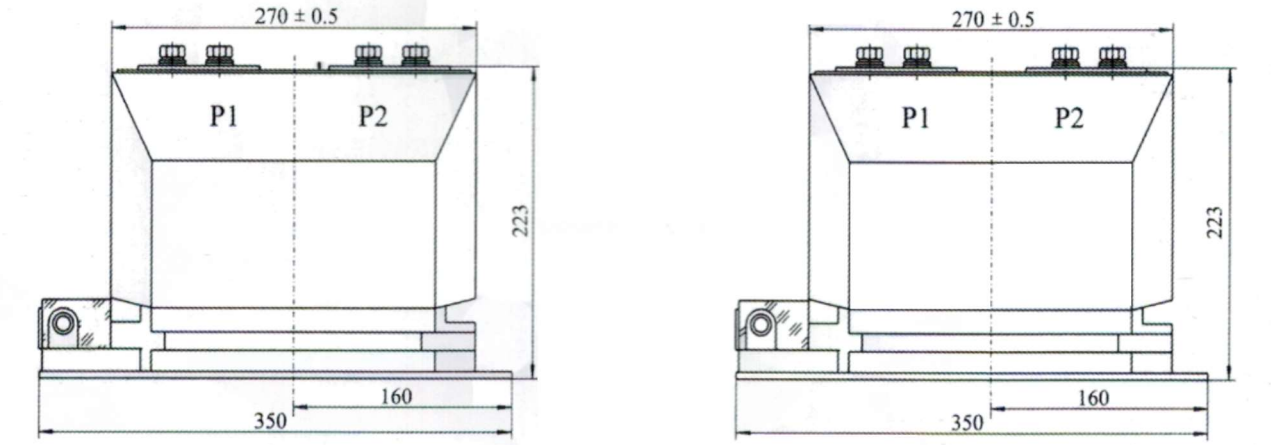

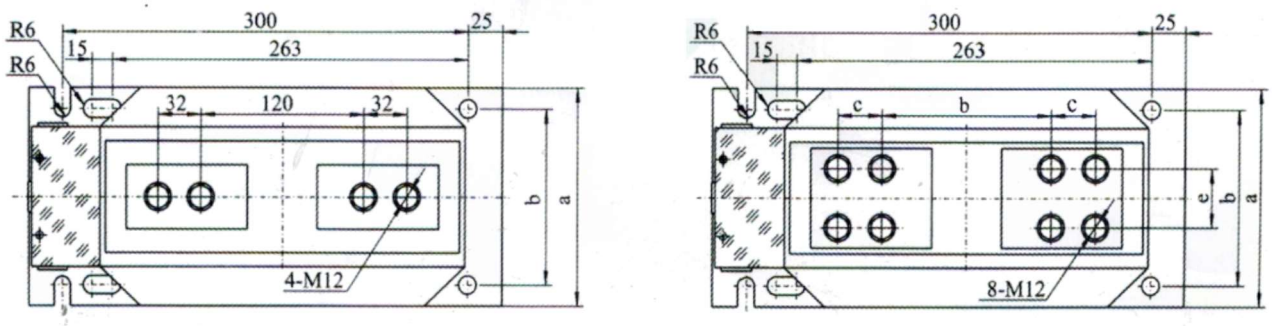

Rated Primary Current		5-600/5		800-2500/5					3100-3150				
Dimension Code		a	b	a	b	c	d	e	a	b	c	d	e
Type	LZZBJ9-10A1G	155	125	155	125	24	120	40					
	LZZBJ9-10A2G	175	145	175	145	24	120	40	175	145	40	100	50