LZZBJ71-12,27.5,35 Type Outdoor Current Transformer



1. Type and Meaning

L Z Z B J 71 - □

- □ — Rated voltage(kV)
- 71 — Design No.
- J — Strengthen
- B — With protective class
- Z — Cast-resin insolated
- Z — Seat type
- L — Voltage transformer

2. Specification



Type	Rated transformation ratio(A)	Accuracy Classes combination	Accuracy class and rated output COSØ=0.8				1s thermal current(kA)	Rated dynamic current(kA)
			0.2S	0.2	0.5	10P10		
LZZBJ71-12	5-100/5	0.2S/10P15 0.2/10P15 0.5/10P15	10	15	20	20	200I In	500I In
	150-300/5						150I In	375I In
	400/5						45	112.5
	500/5							
	600/5						63	157.5
	800/5							
	1000/5						80	200
	1500/5							
LZZBJ71-27.5 LZZBJ71-35	5-100/5	0.2S/10P15 0.2/10P15 0.5/10P15	10	15	20	30	150I In	375I In
	150/5						22.5	57
	200/5						27.5	69
	300/5						45	112.5
	400/5							
	500/5						63	157.5
	600/5							
	800/5							
	1000-2500/5						80	200

Note: any special requirements can be negotiated with us,thermal and heat both stable,we can customized your requirement.

3. Outline and Mounting Dimension

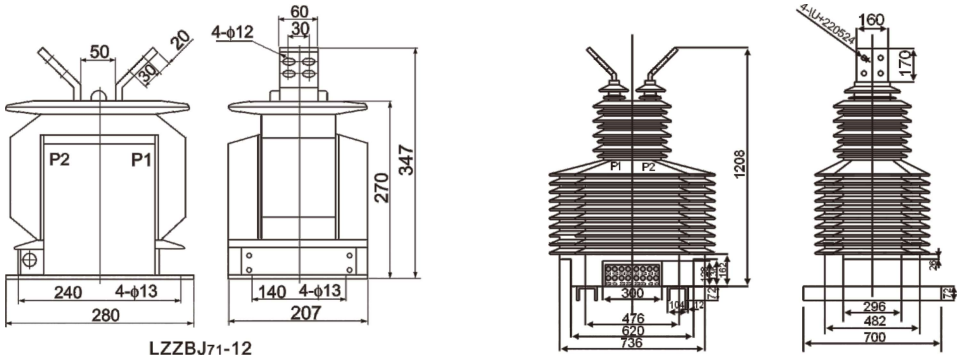

LZZBJ71-12