JN15-12 Series Indoor High Voltage Earth Switch

General

JN15-12 indoor high voltage earth switch complies with requirement of GB1985-89 and IEC129 standard, it’s suitable for power system of 50Hz 12KV and below, and it can be used for earthing protection when equipped with various high voltage switch cabinets.
Advanced design, reliable technology;
Simple structure, easy installation;
Fast opening and closing capacity.

Normal Work Environment

Altitude: ≤ 1000m;
Ambient temperature: +40℃ ~ -10℃
(allowed for storage and transportation at 30℃)
Earthquake intensity: ≤ 8 degree.
In place free of danger of flame and explosion, in places of no severe dust, chemical corrosion and no intense vibration

Main Technical Parameters

No.	Item		Unit	Parameter	
1	Rated voltage		kV	12	
2	Rated short-time withstand current		kV	31.5	
3	Rated duration of short circuit		S	4	
4	Rated short circuit making current		kA	80	
5	Rated peak withstand current		kA	80	
6	Interphase center distance		mm	150,210,275	
7	Rated insulation level	1min power frequency withstand voltage	KV	Phase-to-earth, Phase-to-phase Phase-to-phase	42/48 75/85
		Lightning impulse withstand voltage			

Outline and Installation Size

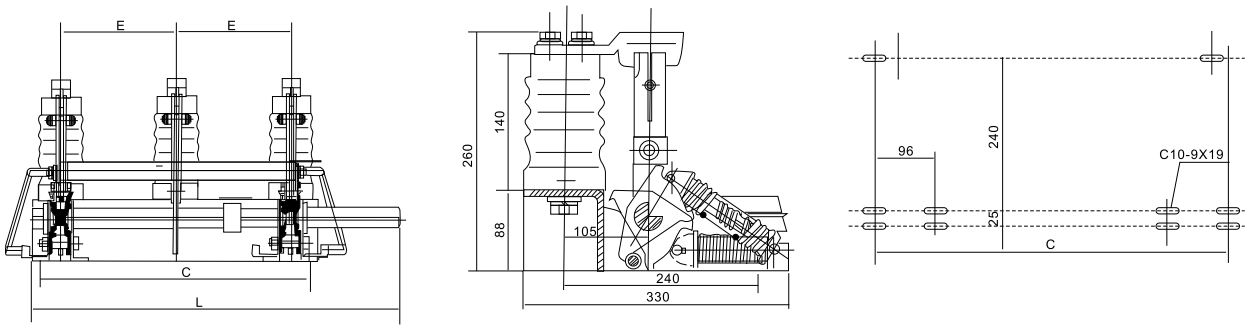

Fig. 1

Model	L	E	C
JN15-12/31.5-210	655	210	516
JN15-12/31.5-230	710	230	556
JN15-12/31.5-250	760	250	596
JN15-12/31.5-275	810	275	646