I. Overview

The GW4 copper tube type series isolation switch is an outdoor high-voltage electrical equipment with AC frequency of 50Hz. It is a product with improved design based on the original GW4 series, used for switching high-voltage lines without load, as well as for electrically isolating high-voltage busbars, circuit breakers and other electrical equipment under maintenance from live high-voltage lines.

The GW4-35 copper tube isolation switch is equipped with CS11-1 manual operating mechanism, and the GW4-35D type is equipped with CS8-6D manual operating mechanism.

1. Usage conditions:

(1) The altitude does not exceed 3000 meters;

(2) The ambient temperature shall not exceed +40℃ and not be lower than -30℃;

(3) Only suitable for horizontal installation locations, with wind speeds not exceeding 35m/s;

(4) The seismic intensity shall not exceed 8 degrees;

(5) The ordinary type is suitable for Class 0 polluted areas, while the anti-pollution type is suitable for Class III polluted areas.

2. Technical parameters:

Product model		GW4-35(DW)
Rated voltage (KV)		35
Maximum working voltage (KW)		40.5
Rated current (A)		630 1250 2000
Rated thermostable current effective value 2S (KA)		20 315 315
Rated dynamic current peak value (KA)		50 80 1000
1min power frequency withstand voltage	To ground	80
(Effective value KV)	Across isolating distance	90
Lightning impulse voltage	To ground	185
(Peak value KV)	Across isolating distance	215

II. Structure and action principles

1. The GW4 series isolation switch is a single pole type of double-post isolation switch, which is connected by pole-to-pole connecting rods when used synchronously with three poles.

2. Figure 1 and Figure 3 show the structural appearance of the GW4 series isolation switch, which mainly consists of base, post insulator, wiring terminal, movable conductive tube, fixed conductive tube, grounding contact, grounding knife switch and connecting rod. Each pole has two porcelain pillars, which are fixed on the bearing seats at both ends of the base and connected by crossed connecting rods. The conductive part is composed of movable and fixed parts, which are fixed on the top of the two porcelain pillars for horizontal opening and closing. The contact part is in the middle of the two porcelain pillars, and the waterproof cover can fully cover the middle contact part.

3. When equipped with manual operating mechanism, the GW4-35 (DW) type isolation switch operates one porcelain pillar and conductive body to rotate by 91°, and the other porcelain pillar and conductive body are also rotated by the connecting rod by 91°. The switch will open or close in the same direction, and the grounding switch will simultaneously link the grounding part to close or open.

4. The auxiliary switch in the operating mechanism is directly connected to the main shaft of the mechanism, and when the opening and closing actions occur, the corresponding contacts are open or closed to send out corresponding opening and closing signals. The opening and closing action of the grounding switch is synchronized with the three phases through linkage of the water and gas pipe.

III. Installation and adjustment

1. This series of isolation switches should be horizontally installed on iron frame or other supports, and the operating mechanism should be installed below the isolation switch (see Figure 2 and Figure 4). Before installation, the operating mechanism of the switch should be checked (whether the screws are tight, whether the rotation is flexible and whether the opening and closing positions are correct);

2. Before installation, a linkage diagram should be made based on the relative position of the isolation switch and operating mechanism to determine the length of the connecting steel pipe and the appropriate orientation of the linkage arm.

3. During installation, the isolation switch and operating mechanism can be installed first, and then predetermined connecting pipe can be connected between the two. The water and gas pipe between the isolation switch poles is welded to the provided single headed bolt, and the grounding switch's grounding knife torsion bar is welded to the provided torque joint with the water and gas pipe; when connecting the operating mechanism, the operating torsion bar is welded to the provided torsion joint and universal joint with water and gas pipe.

4. Adjustment of the three-phase synchronization of the main switch balde: The difference in simultaneity between three-phase switch blades should not exceed 6mm. Adjust the grounding switch separately to ensure that it can be closed in place. Finally, fix the limit stop nail to play a limiting role when the grounding switch is opened or closed.

5. When installing isolation switches, attention should be paid to the following:

(1) When the handle of the operating mechanism reach the final point of the "open" position,
the isolating switch blade must reach the final point of the open position; while the handle is at the final point of "closed", the isolating switch blade must reach the final point of the closed position.

(2) The insulation interval of the isolation switch shall not be less than 1200mm between each phase.

(3) The connection between the wire and the isolation switch should be particularly firm and placed on the same plane as much as possible to minimize the stress they are subjected to.

(4) The installation height of the isolation switch is generally 2.5-10 meters (distance from the base to the ground), the height of the operating mechanism is generally 1.3 meters (distance from the handle axis to the ground).

(5) The contact points and grounding points should be cleaned of oxidation marks, and the resistance of the grounding circuit should not exceed 3Ω.

(6) After installation, operate more than 20 times to check whether any component is loose and whether the three-phase synchronization of the main switch blade has changed; check whether the grounding switch is properly closed; check whether the operating mechanism can be in place and locked; check whether the action of the auxiliary switch is correct.

(7) For the coordination between auxiliary switch and isolation switch, the opening signal contact should start action after it reaches 75% of the full stroke of the switch blade, and the closing signal contact should start action after the switch is closed. If this result is not achieved, it is necessary to correct the orientation of the auxiliary switch's rotation axis.

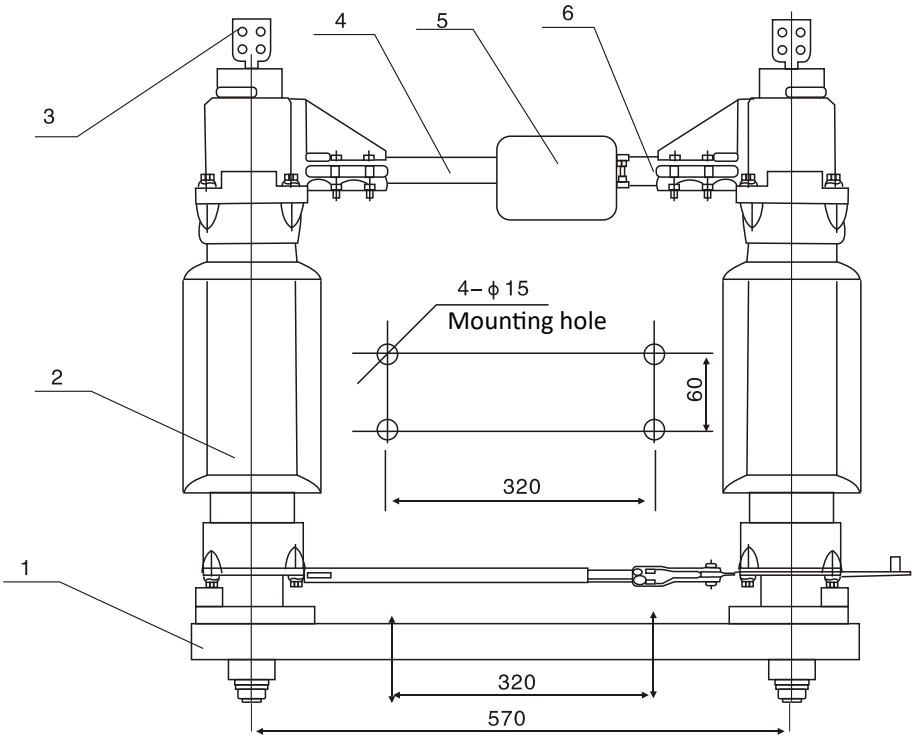

1. Base 2. Post insulator 3. Wiring terminal 4. Fixed conductive tube
5. Waterproof cover 6. Movable conductive tube

Figure 1 GW4-35 (W) Outdoor high voltage isolation switch structure diagram

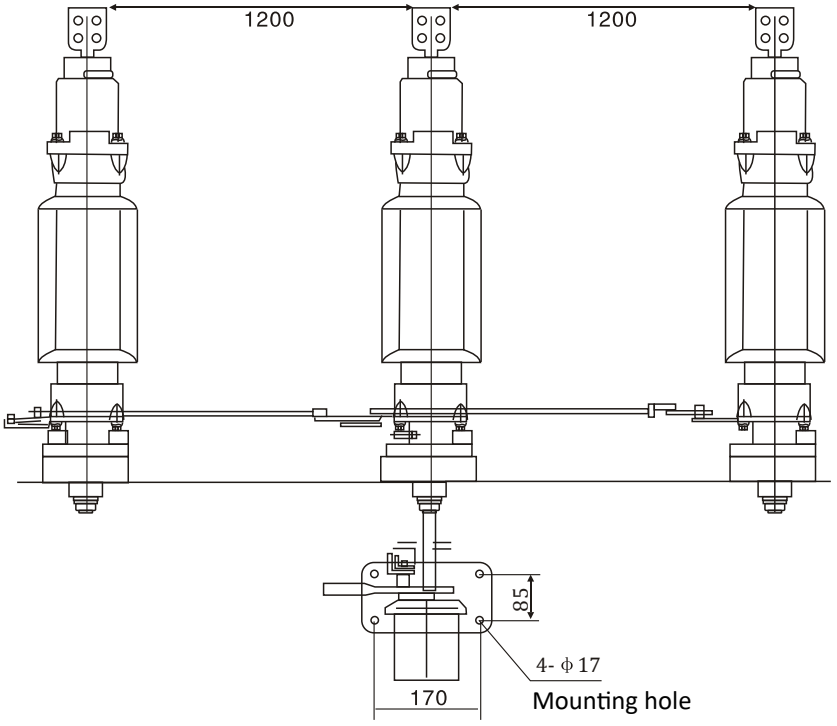

Figure 2 GW4-35 (W) Outdoor high voltage isolation switch structure diagram

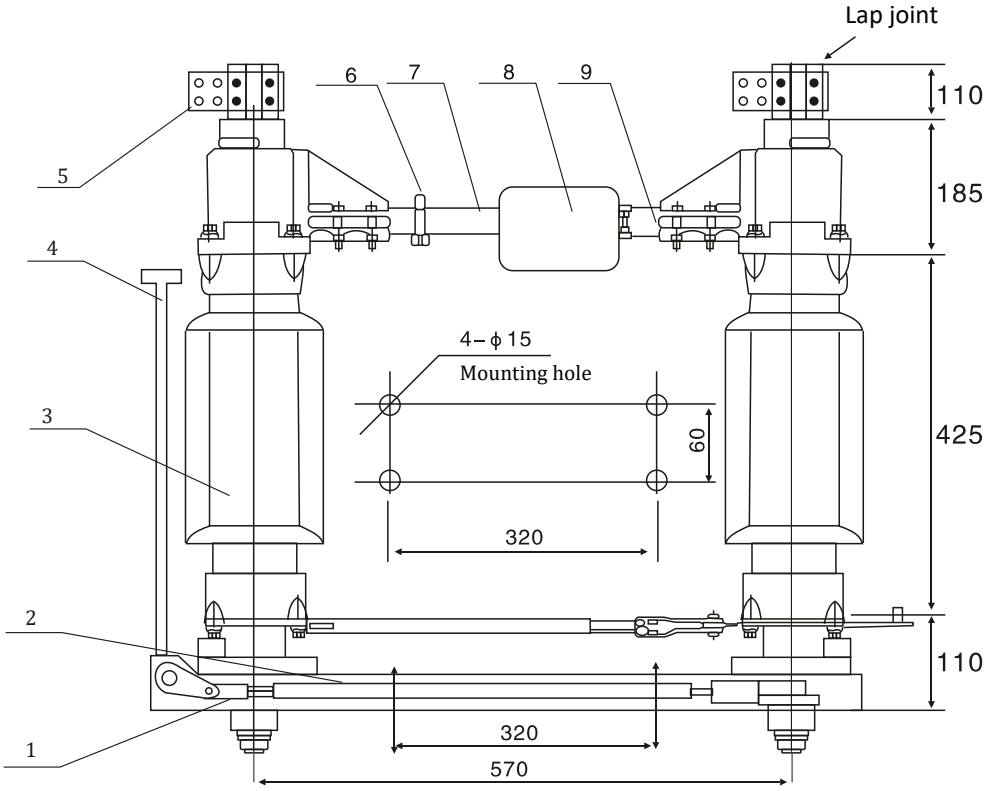

1. Base 2. Grounding connecting rod 3. Post insulator 4. Grounding switch blade 5. Wiring terminal 6. Grounding contact 7. Fixed conductive tube 8. Waterproof cover 9. Movable conductive tube

Figure 3 GW4-35 (DW) Outdoor high voltage isolation switch structure diagram

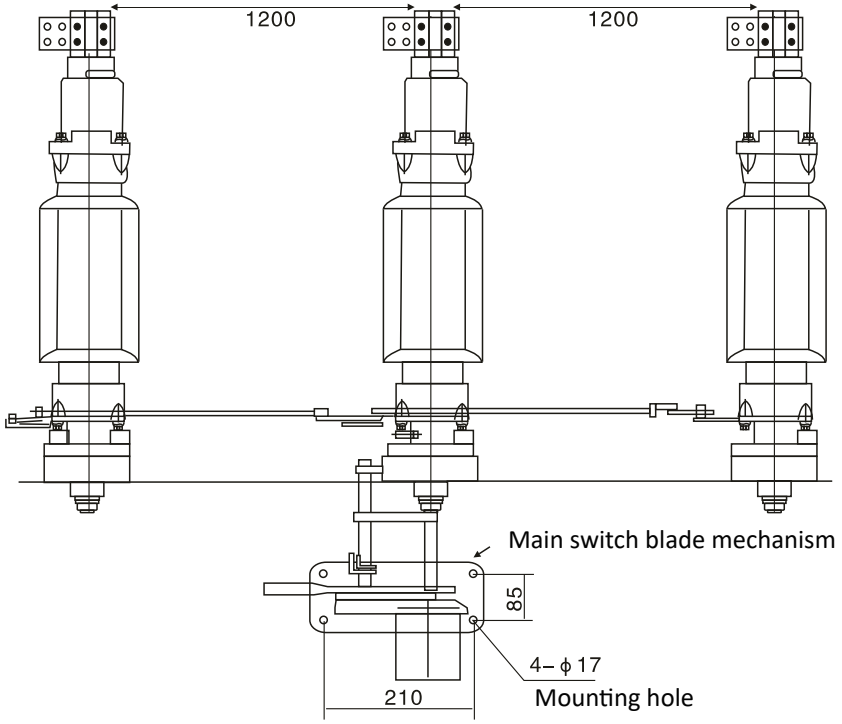

Figure 4 GW4-35 (DW) Outdoor high voltage isolation switch structure diagram