# BIT-SPT50-D

Servo Direct Drive Single-Axis Pan Rotator & Positioner
Maximum Load Capacity 50kg/110lb



## Key Features:

- Maximum load capacity 50kg/110lb
- Direct drive servo motor, high precision, quick response
- Die-cast aluminum material
- 360 degree continuous pan/azimuth rotation
- Pan/azimuth speed 0.01°~180°/S
- Preset accuracy: ±0.05°
- Self-lock with memory after power failure
- Support coordinate feedback and control
- Support lens preset, adaptive speed to zoom rate
- Rated IP66 for dust and water ingress

## General Description:

BIT-SPT50-D is a 50kg/110lb top load sing-axis pan rotator & positioner that will only rotate in pan direction, but not tilt direction. With built-in direct drive servo motor, its maximum rotation speed can reach up to 180°/S with 0.05 degree preset accuracy. It is made of die-cast aluminum material and equipped with default dual military style connectors. Many other advanced features are available on BIT-SPT50-D, including preset, cruising track, auto scan and guard location.

BIT-SPT50-D pan rotator & positioner is an ideal choice to load devices like video camera, dish/yagi antenna, loud speaker, spot light, etc and to work as positioning or tracking part of various systems including video surveillance, telecommunication, and border & costal defence.

## Dimension:

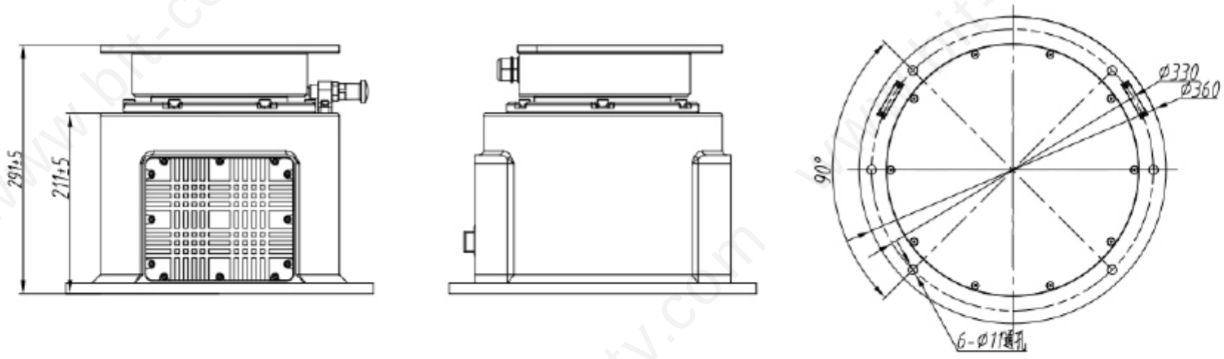


**Blue Icon (Tianjin) Technology Co., Ltd.**
F9, Macalline Business Center
No. 29, Heiniucheng Rd.
Hexi District 300210
Tianjin, China

**Email:** sales@bit-cctv.com
**Phone:** +86-139-2068-8922
**Website:** www.bit-cctv.com

## Specifications:

| Model | BIT-SPT50-D |
|---|---|
| Max. Load Capacity | 50kg/110lb, top load |
| Rotation Angle | 360° continuous pan rotation |
| Rotation Speed | Pan: 0.01°/s-180°/s |
| Preset Accuracy | ± 0.05° |
| Programmable Presets | 200 |
| Cruising Track | 8, each with 10 preset positions |
| Scan | 1 |
| Position Feedback | Support position query/feedback via RS485 or optional real-time feedback via RS422 |
| Absolute Position | Support |
| Homing | Support with the time period of 1~60 min |
| Self-lock | Support |
| Start Movement | A series of movements for calibration when the unit is powered on which can't be canceled. External cabling may twist during the start movement. |
| Protocol | Pelco P/D |
| Communication Interface | RS485 or RS422 or RS232 |
| Baud Rate | 2400/4800/9600/19200 bps |
| Transmission | Servo motor direct drive |
| **Standard Wiring/Interface** | |
| Pan Tilt Base | 100M Ethernet with RJ45 (4 wire, pass-through), 24V AC/DC (2 wire), GND |
| Pan Tilt Top | 100M Ethernet with RJ45 (4 wire, pass-through), RS485 P/T control (2 wire), 12V DC (2 wire), 24V AC/DC (2 wire), GND |

**Blue Icon (Tianjin) Technology Co., Ltd.**
F9, Macalline Business Center
No. 29, Heiniucheng Rd.
Hexi District 300210
Tianjin, China

**Email:** sales@bit-cctv.com
**Phone:** +86-139-2068-8922
**Website:** www.bit-cctv.com

| General | |
|---|---|
| Operating Voltage | DC24V±20 % |
| Power Consumption | ≤90W |
| Working Temperature | -40ºC~+65 ºC |
| Working Humidity | 90±5% RH |
| Storage Temperature | -40ºC~+70ºC |
| Protection Level | IP66 |
| Material | Aluminium Alloy |
| Weight | 25kg/55lb |
| Dimension L×W×H | 360×360×291mm/14.17x14.17x11.46in (L×W×H) |

## Standard Wiring:

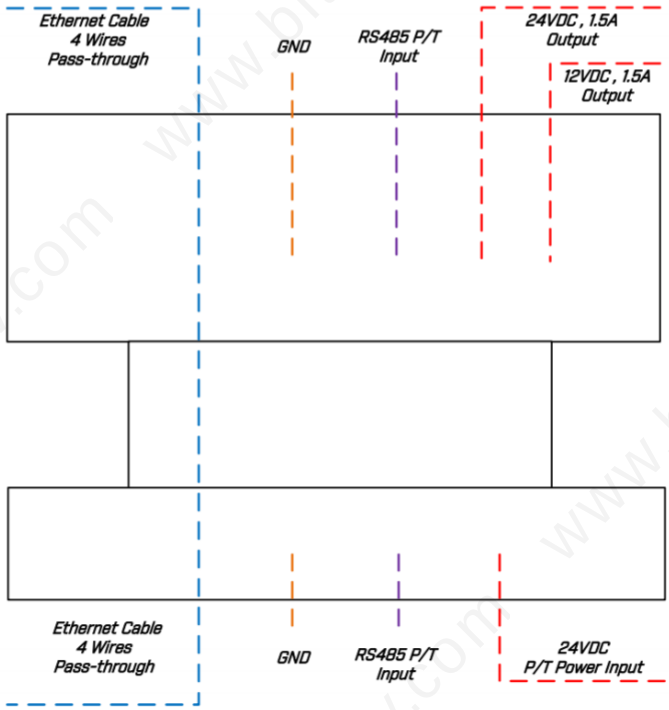


**Blue Icon (Tianjin) Technology Co., Ltd.**
F9, Macalline Business Center
No. 29, Heiniucheng Rd.
Hexi District 300210
Tianjin, China

**Email:** sales@bit-cctv.com
**Phone:** +86-139-2068-8922
**Website:** www.bit-cctv.com

# BIT-SPT50-D

Servo Direct Drive Single-Axis Pan Rotator & Positioner
Maximum Load Capacity 50kg/110lb

## Image Gallery:







**Blue Icon (Tianjin) Technology Co., Ltd.**
F9, Macalline Business Center
No. 29, Heiniucheng Rd.
Hexi District 300210
Tianjin, China

**Email:** sales@bit-cctv.com
**Phone:** +86-139-2068-8922
**Website:** www.bit-cctv.com