BIT-HS4215

15 Inch Dual Cabin Camera HousingTop Load
Sunshield, Heater/Fan & Wiper



Key Features:

- 15 inch size, outdoor application
- Work alone or with pan tilt
- Aluminum alloy material
- Top open design, easy camera installation
- Optional sunshield, heater, fan, wiper
- IP66 ingress protection

General Description:

BIT-HS4215 is a medium size dual vision security camera housing, designed for multiple security devices installation and protection, and can work alone or work with our medium duty pan tilt head BIT-PT520 as part of PTZ camera system. Made of aluminum alloy and featuring IP66 ingress protection, it can work at all-weather situation.

Dimension:

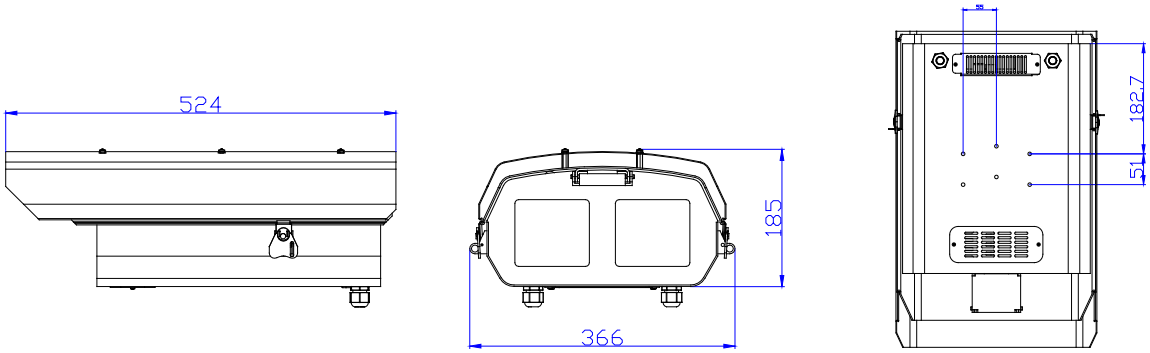

Unit:mm

Blue Icon (Tianjin) Technology Co., Ltd.
F9, Macalline Business Center
No. 29, Heiniucheng Rd.
Hexi District 300210
Tianjin, China

Email: sales@bit-cctv.com
Phone: +86-13920688922
Website: https://www.bit-cctv.com
Youtube: https://youtube.com/@bitcctvsolutions

Specifications:

Model	BIT-HS4215			
Application	Indoor/Outdoor			
Dimensions (L)x(W)x(H)	524x 366x185 mm 20.63x14.41x7.28 inch			
Left Cabin Space (L)x(W)x(H)	190x108x130 mm 7.48x4.25x5.12 inc			
Right Cabin Space (L)x(W)x(H)	190x108x130 mm 7.48x4.25x5.12 inch			
Window (W)x(H)	100x90 mm (3.94x3.54 inch)			
General				
Power Supply	AC 24V ± 20% or DC24V ± 10%			
Power Consumption	≤65W			
Working Temperature	-35ºC ~ 60ºC (-31 ºF ~ 140 ºF)			
Working Humidity	≤90% RH (No condensing, no heating)			
Auto Temperature Control	Heating on: 8ºC(46.4ºF) ±5, off 20ºC(68ºF) ±5 Fan on: 37º(98.6ºF)C ±5, off 20ºC(68ºF) ±5			
Protection Level	IP66			
Material	Alloy aluminum			
Weight	6.5 kg (14.33 lb)			
Order Information	**Options**			
Model	**Housing Only**	**Sunshield**	**Heater/Fan**	**Wiper**
BIT-HS4215	Yes	No	No	No
BIT-HS4215K	Yes	Yes	No	No
BIT-HS4215SHK	Yes	Yes	Yes	No
BIT-HS4215SHKW	Yes	Yes	Yes	Yes

Blue Icon (Tianjin) Technology Co., Ltd.
F9, Macalline Business Center
No. 29, Heiniucheng Rd.
Hexi District 300210
Tianjin, China

Email: sales@bit-cctv.com
Phone: +86-13920688922
Website: https://www.bit-cctv.com
Youtube: https://youtube.com/@bitcctvsolutions