2010TS

Heavy Duty Tripod for Pan Tilt Positioner
200kg Load Capacity





Key Features:

- Maximum load capacity 200kg
- Maximum weight 15kg
- Aluminum alloy and stainless steel
- Minimum height 860mm
- Maximum height 1520mm
- Max transport length 980mm
- Portable bag included

General Description:

2010TS is a heavy duty tripod for pan tilt units with load capacity up to 200Kg. Portable design and adjustable height. Feet brackets for ground mounting.

Mounting plate can be customized.

Blue Icon (Tianjin) Technology Co., Ltd.
F9, Macalline Business Center
No. 29, Heiniucheng Rd.
Hexi District 300210
Tianjin, China

Email: sales@bit-cctv.com
Phone: +86-13920688922
Website: https://www.bit-cctv.com
Youtube: https://youtube.com/@bitcctvsolutions

2010TS

Heavy Duty Tripod for Pan Tilt Positioner
200kg Load Capacity

Drawings:





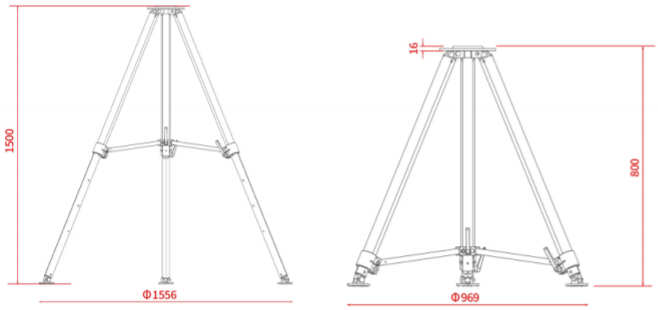



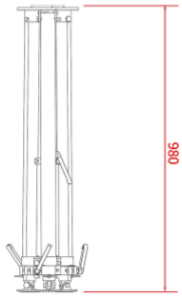



Blue Icon (Tianjin) Technology Co., Ltd.
F9, Macalline Business Center
No. 29, Heiniucheng Rd.
Hexi District 300210
Tianjin, China

Email: sales@bit-cctv.com
Phone: +86-13920688922
Website: https://www.bit-cctv.com
Youtube: https://youtube.com/@bitcctvsolutions