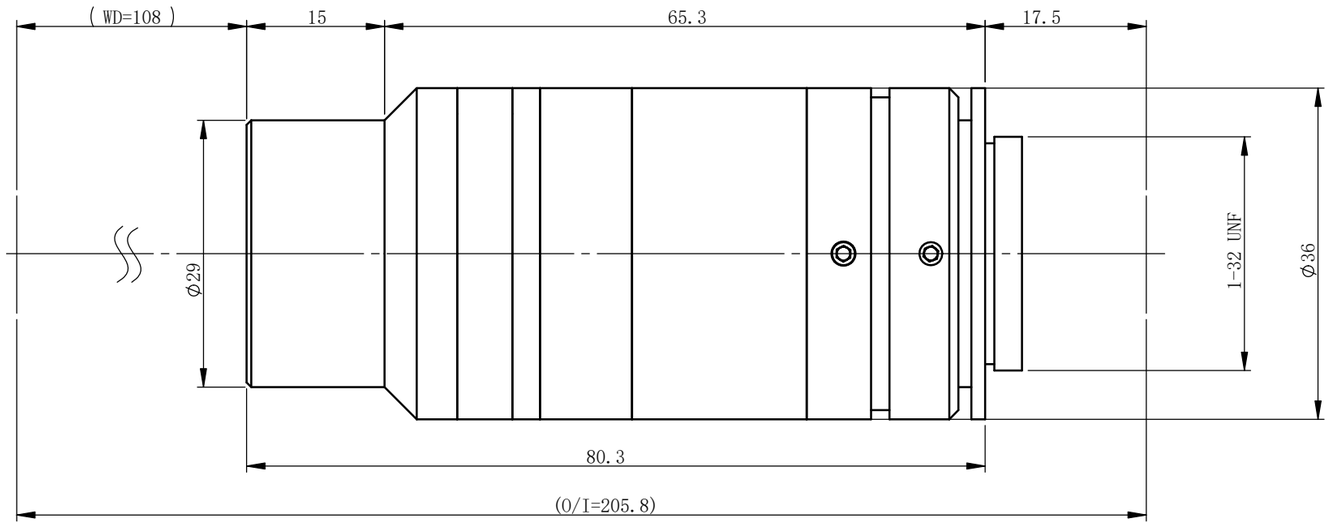

XF-MH055X108-1.1C

Specification

Magnification		0.55
Object field of view		Φ32.0mm
Image field of view		Φ17.6mm
Working Distance		108mm±3%
Depth of field		2.1mm
F#		F6.5
Resolution		7.8μm
MTF		>0.3@150lp/mm
Distortion		<0.104%
Detector type:		
1.1'	14.2×10.4	25.8×18.9mm
1'	13.1×8.8	23.8×16mm
2/3'	8.45×7.07	15.4×12.9mm
1/2'	6.4×4.8	11.6×8.7mm

Undefined tolerance(mm)		degree	File Name		
X.X	±0.2	±30min	XF-MH055X108-1.1C-外形尺寸-EN		
X.XX	±0.02		Drawing Name		
X.XXX	±0.005	Drawing Size: A3			
	Sign	Data/Ver.	Material	Ratio	Product Name
Design				1:2	
Modify1			Qty		Canrill OPTICS
Modify2			Total:	Page:	

All design and drawings are intellectual property of Canrill Optics, can not be copied without Canrill's authorization.