Circular Electrical Connector(599 Series III)

Production Introduction:

***Three-start** threaded quick connection with anti - loosening mechanism.
***Compact size**, lightweight, and high contact density.
***Equipped** with electromagnetic shielding.
***Removable** crimp contacts and prevent pin from misinsertion.
***Size 12#/16#** contact, hole positions compatible with fiber optic contacts.
***Size 12#/10#/8#** contact, hole positions compatible with coaxial and shielded contacts.
***Available in fire** - resistant shell, composite shell, aluminum alloy shell, and various plating options.
***High-strength** vibration resistance at high temperatures, suitable for harsh sand and humid environments.



Application: Circuit signal connection

Main Technical Performance

[Mechanical Performance]
--**Shell material:** Aluminum alloy, Stainless steel
--**Cadmium plating** with military green
F- Electroless nickel plating.
K-Stainless steel passivation.
--**Insulator:** Thermoplastic or thermosetting materials.
--**Cable seal and sealing ring:** Silicone rubber.
--**Contact Features:**Gold-plated copper alloy.
--**Mechanical Life:** 500 cycles.
--**Shock:** 3ms half-sine wave, peak Acceleration 300g.
[Electrical Performance]
--**Voltage Withstand: V**

Operating Class	Sea level	21000m High
M	1300	800
N	1000	600
I	1800	1000
II	2300	1000

Note: Different contact arrangements correspond to different working levels. For specific working levels, please refer to the letters in the upper - right corner of the contact arrangement diagram.

--**Contact resistance and rated current:**

Contact Specifications	Working Diameter(mm)	Contact Resistance(mΩ)	Operation Current(A)
22D	Φ0.76	≤12	5
20#	Φ1.00	≤5	7.5
16#	Φ1.60	≤2.5	13
12#	Φ2.40	≤1.5	23
10#	Φ3.15	≤1.0	40

[Environmental Performance]
--**Temperature Range**
W: -65°C to +175°C; F/K: -65°C to +200°C
--**Sealing:**Mated connectors comply with low-pressure immersion requirements.

Operating Environment：

The product is designed for harsh environments with high vibration, rain exposure, sand, dust, and humidity.
--**Vibration**
Sine: 60g with temperature cycling and simulated accessories (36 hours)
Random：At high temperature: 100–1000Hz, $1g^2/Hz$ PSD (41.7g RMS)
At ambient temperature: 100–1000Hz, $5g^2/Hz$ PSD (49.5g RMS)
--**Contact Retention Force:** Minimum force (in Newtons)
22D:45N 20#:67N
16#:111N 12#:111N
10#:111N 8#:111N

--**Insulation Resistance:** ≥5000 MΩ (500 VDC)
--**Shell Conductivity:**
Type W:2.5 mΩ **Type F**:1 mΩ **Type K**:10 mΩ
--**EMI Shielding:**
100 MHz–1 GHz: Minimum attenuation 85dB (F/W types)
1 GHz–10 GHz: Minimum attenuation 65dB (F type), 50dB (W type)
--**8# Double Coaxial Contacts：** Frequency range: 0–20 MHz
Rated voltage： 500VAC Max
125 VAC at 21,000 M
Voltage drop:
Inner/center contacts: ≤55 mV at 1A;
Outer contacts: ≤75 mV at 12A.
--**Salt Spray**: **type W**: 500h **type F**: 48h
type K: 1000h
--**Humidity**: 24-hour cycles ×10.
--**Fluid Resistance**: Resistant to fuels, coolants, and solvents.

Model naming

Company Code+Series Designation	DL+J599/		20	W	B	35	P	N	-H
Type	20-Square Panel Receptacle 24-Nut - Mounted Receptacle 26-Shielded Plug	Rear accessories can be installed on all three types							
Shell coating	W - Cadmium Plating (Military Green) F - Electroless Nickel Plating K - Stainless steel passivation								
Shell/Index No.	From A to J 09 A, 11 B, 13 C, 15 D, 17 E, 19 F, 21 G, 23 H, 25 J								
Contact Arrangement	Refer to the GJB 599-III Series Contact Arrangement Diagram								
Contact Type Codes	P-Pin, Crimp & Solder Type PL-Pin, Long PCB Type PC-Pin, Short PCB Type A-Special-purpose Pin Contac	S-Socket,Crimp&Solder Type; SL-Socket, Long PCB Type; SC-Socket, Short PCB Type; B-Special-purpose Socket Contact.							
Key Positon	N-Normal A、B、C、D、E--adjustable keying.								
Soldered Contact Designation (For Soldered Connectors Only), H-Soldered Contacts.									

Note: For high oil resistance requirements, the connector seals are made of fluorosilicone rubber, and the model suffix C1 shall be added (e.g., J599/20FE35PNC1).

[Model Naming example]

DLJ599/20KB35PN-H: J599 Series Square Panel Receptacle，Shell Plating: Stainless steel passivation (K)，Shell Number: 20，Insulator Material: B (e.g., thermosetting)，Contact No.: 35，Contact Type: Pin, crimp & solder (P) with N keying，Soldered Contacts: H (For soldered connectors only).

Crimping Contact Parts:

Contact Specifications	Diameter (mm)	Pin Color Coding	Jack Color Coding	Crimp Barrel ID(mm)	Crimp Barrel OD(mm)	Cable cross-section area(m^2)	Cables Type(awg)	Conductor Insulation OD(mm)
22D	Φ0.76	Orange - Blue - Black	Orange - Yellow - Grey	0.85	1.20	0.08 0.125 0.2 0.3	28 26 24 22	0.76~1.37
20#	Φ1.00	Orange - Blue - Grange	Orange - Green - Brown	1.17	1.78	0.2 0.3 0.5	24 22 20	1.02~2.11
16#	Φ1.60	Orange - Blue - Yellow	Orange - Green - Red	1.68	2.62	0.5 0.8 1.0 1.2	20 18 16	1.65~2.77
12#	Φ2.40	Grange - Blue - Green	Orange - Green - Orange	2.49	3.84	2.0 3.0	14 12	2.46~3.61
10#	Φ3.15	Green - Red - Grey	Green - Orange - Purple	3.40	4.65	4.8	10	3.42~4.12
8#	Φ3.6	/	/	4.55	6.4	8.37	8	6.4~6.9

599 Series III Composite material Electrical Connector



Main Technical Performance

[Mechanical Performance]

--**Shell:** Composite material (30% lighter than aluminum alloy housing).

--**Plating:**

J-Cadmium plating (military green);

M- Electroless nickel plating.

--**Insulator:** Thermoplastic or thermosetting material

--**Sealing body and O-ring:** Silicone rubber

--**Contact:** Copper alloy with gold plating

--**Lifetime:** 1500 mating cycles

--**Shock:** 3ms half-sine wave with peak acceleration of 300g

--**Vibration:**

Sinusoidal: 60g, with temperature cycling and simulated accessories(36 hours);

Random：High temperature: 100~1000Hz power spectral density $1g^2/Hz$ (41.7g RMS)；Ambient temperature: 100~1000Hz, power spectral density $5g^2/Hz$ (49.5g RMS)

[Electrical Performance]

--**Voltage Withstand:V**

Operating Class	Sea level	21000m Height
M	1300	800
N	1000	600
I	1800	1000
II	2300	1000

*** Note**: Different contact arrangements have different working conditions, see the label in the upper right corner of the contact arrangement for details.

--**Contact resistance and rated current:**

Contact Specifications	Working Diameter(mm)	Contact Resistance(mΩ)	Rated Current(A)
22D	Φ0.76	≤12	5
20#	Φ1.00	≤5	7.5
16#	Φ1.60	≤2.5	13
12#	Φ2.40	≤1.5	23
10#	Φ3.15	≤1.0	40

[Environmental performance]

--**Salt spray:** 2000 hours

--**Temperature range:**

Class J:-65℃~+175℃;

Class M:-65℃~+200℃.

--**Sealing:** The mating connector meets the requirements of the low pressure impregnation.

--**Damp Heat:** 10 cycles in 24 hours.

--**Liquid resistance:** Resistant to a variety of fuels, coolants, solvents.

--**Contact holding force:** (minimum force in Newtons)

22D:45N 20#:67N

16#:111N 12#:111N

10#:111N 8#:111N

--**Insulation resistance:** ≥ 5000MQ (500V DC).

--**Shell conductivity:**

Class J：3 mΩ; **Class M**：3 mΩ.

--**Electromagnetic interference shielding**：

From 100 MHz to 1 GHz,

minimum attenuation is 85dB (Class J, Class M),

When 1GHz~10GHz,

minimum attenuation is 65dB(class M),50dB(Class J).

Model naming

Company Code+Series Designation DL+599/		20	J	B	35	P	N	-H
Type	20-**Square** socket 24-**Nut fastening socket** (all three types can be installed with rear accessories, see details) 26-**RFI** shielded plug							
Shell plating	**J**-Cadmium plated military green **M**-Electroless nickel plating							
Shell/Index No.	From A to J 09/A 11/B 13/C 15/D 17/E 19/F 21/G 23/H 25/J							
Contact arrangement	For details, please refer to "599Ⅲseries contact arrangement diagram".							
Contact type	**P**-Pin, Crimp Type; **S**-Jack, Crimp Type; **H**-Pin,crimp type, 1500 life; **J**-Jack, crimp type, 1500 life; **PL**-PCB type pins; **SL**-long printed circuit board type jack; **PC**-Short board type pins; **SC**-short printed board type jack; **A**-special-purpose pin contacts; **B**-special-purpose jack contacts.							
Key positopn	N-Normal A、B、C、D、E, adjustable keying.							
Welding contact identification (for welded connectors only), H-Welding contacts.								

Notes： When there are high oil resistance requirements, the connector seal material is fluorosilicone rubber, and C1 is added after the original model (for example: DL599/20JE35PNC1).

[Model marking example]

D L J599/20JB35PN-H:

599 series square panel socket, shell plating is cadmium plated military green, shell B, contact 35, contact is pin, crimp type, N key position. Welded contacts are only suitable for welded connectors.

Plug and socket sealing cover

[Model naming]

Company Code+Series Designation DL+599/		32	F	09	N
Type	32-Plug sealing cover 33-Socket sealing cover				
Shell plating	**W**-Aluminum shell cadmium plated military green. **F**-Electroless nickel plating on aluminum shell. **K**-Stainless steel passivation. **J**-Composite shell cadmium plated. **M**-composite shell and Electroless nickel plated				
Shell No.	09-11-13-15-17-19-21-23-25				
Chain type	**R**-Stainless steel wire chain connector (suitable for square socket) **N**-Stainless steel wire chain belt ring (suitable for nut fastening socket)	**C**-Nylon wire chain connector (suitable for square socket) **R**-Nylon chain belt ring (suitable for nut fastening socket)			

NOTE: Sealing caps should be ordered separately and not supplied with connectors.

[Outline Dimension]

Plug sealing cover DL599/32（D38999/32）

Class C

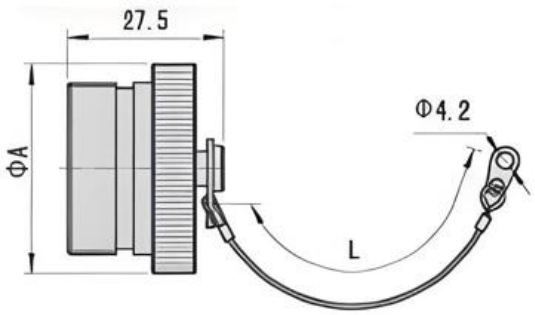

Class S

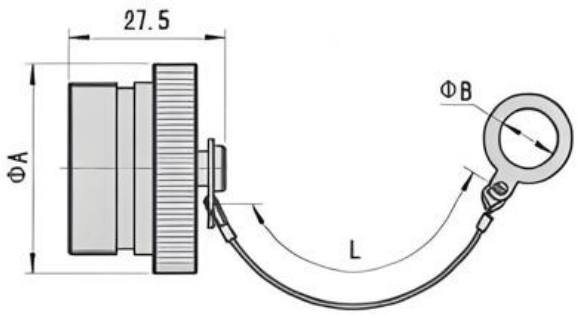

Socket sealing cover DL599/33（D38999/33）

Class C

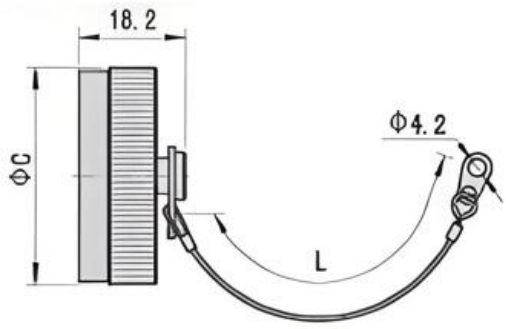

Class S

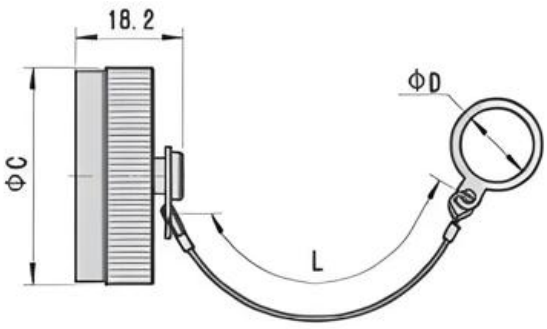

Shell No.		09	11	13	15	17	19	21	23	25
A	max	22.86	25.40	30.48	33.02	36.83	39.37	43.18	44.45	48.26
B	min	12.92	17.78	19.27	22.60	25.62	28.95	31.97	34.03	38.32
C	max	22.86	27.86	30.48	31.75	36.83	38.10	41.91	44.45	48.26
D	min	17.78	21.33	25.62	28.95	31.97	35.30	38.32	41.65	44.45
L	max	127.00	127.00	127.00	127.00	127.00	127.00	127.00	127.00	127.00

[Model naming]

Company Code+Series Designation DL+J1784/	38-	15	N

Type	**14**-Tail nut; **16**-Curved clamp; **20**-Shielded tail accessories; **38**-Straight cable; **39**-Curved cable clamp; **69**-Heat shrinkable sheathed tail accessories		
Shell No.	09-11-13-15-17-19-21-23-25		
Shell plating	**W**-Cadmium plated military green; **N**-Electroless nickel plating; **S**-Stainless steel passivation.		

[J1784/14-Tail nut] (No clamping cable and no shielded accessories)

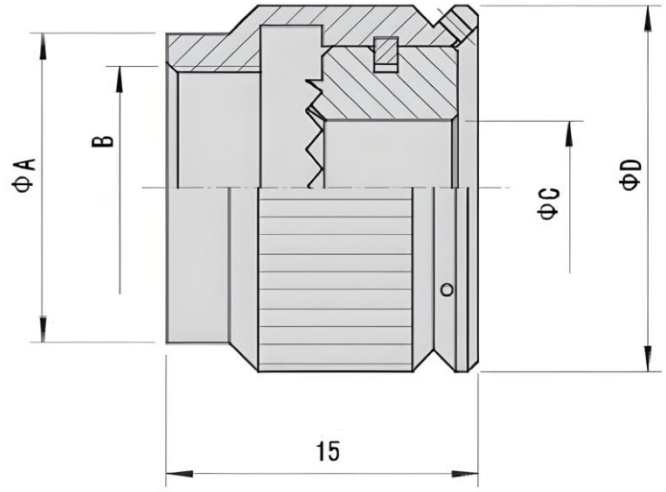

Anti-rotation accessories, tight hoop sealing body to ensure the environmental resistance of the connector. Can not clamp the cable, used in general environmental conditions.

Shell No.	A	Thread B	C	D
09	15.2	M12×1	7.9	19
11	18.2	M15×1	10.8	22
13	21.2	M18×1	13.6	25.1
15	25.1	M22×1	16.9	29
17	28.1	M25×1	20.1	32.1
19	31.1	M28×1	22.1	35.1
21	34.0	M31×1	25.2	38.1
23	37.0	M34×1	28.3	41.1
25	40.0	M37×1	31.6	44.1

[J1784/20-Shielded Tail Accessories] (Shielded Unclamped and Cable Accessories)

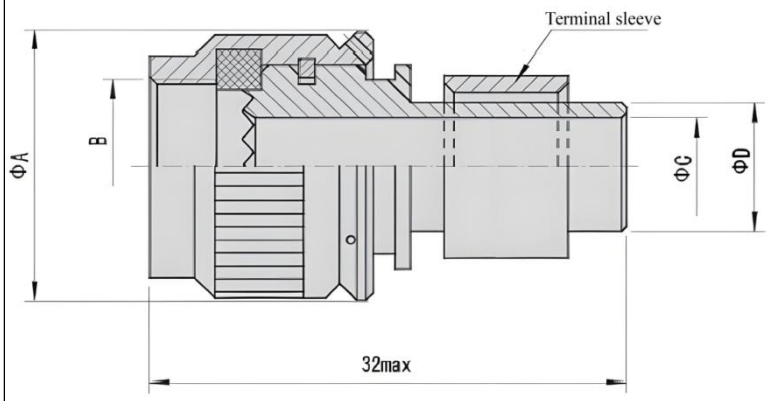

Anti-rotation and clamping shield net accessory. It can tightly hoop the sealing body and provide the connection function between the shielding net and the tail accessory to ensure the environmental resistance and electromagnetic shielding performance of the connector. It cannot clamp the cable and is used in occasions where the cable is subjected to less tension.

Shell No.	A	Thread B	C	D	Briquetting marks
09	19	M12×1	6.55	8.81	08
11	22	M15×1	8.63	12.65	10
13	25.1	M18×1	10.90	12.95	12
15	29	M22×1	14.10	16.00	14
17	32.1	M25×1	17.25	19.30	16
19	35.1	M28×1	20.40	22.61	18
21	38.1	M31×1	23.60	25.65	20
23	41.1	M34×1	26.40	28.70	22
25	44.1	M37×1	28.40	30.53	24

[J1784/69-Heat Shrink Sheathed Tail Accessories] (Shielded Unclamped Cable Accessories)

	Shell No.	A	Thread B	C	D

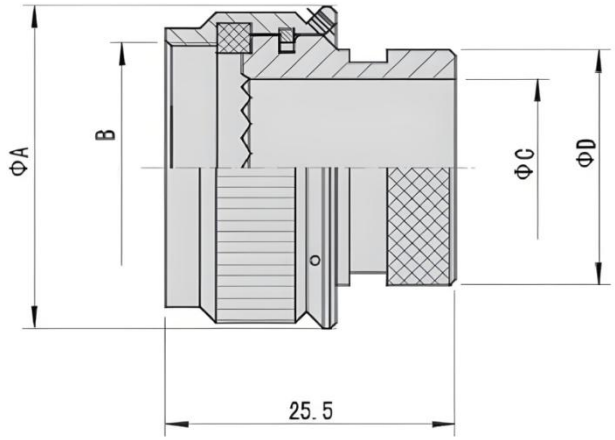

Anti-rotation, clamping shielding net accessory. It can tightly hoop the sealing body and provide the connection function between the shielding net and the tail accessory to ensure the environmental resistance and electromagnetic shielding performance of the connector. Not suitable for clamping cables, used in applications where cables are subject to low tensile forces.
Notes：Heat shrinkable sheath purchased separately

09	19.0	M12×1	6.7	13.5
11	22.0	M15×1	9.9	15.3
13	25.1	M18×1	12.8	19.6
15	29.0	M22×1	16.0	21.2
17	32.1	M25×1	19.2	24.4
19	35.1	M28×1	21.4	26.4
21	38.1	M31×1	24.6	30.9
23	41.1	M34×1	27.7	34.4
25	44.1	M37×1	30.9	36.6

[J1784/38-Straight cable clamp] (clamping cable and unshielded accessories)

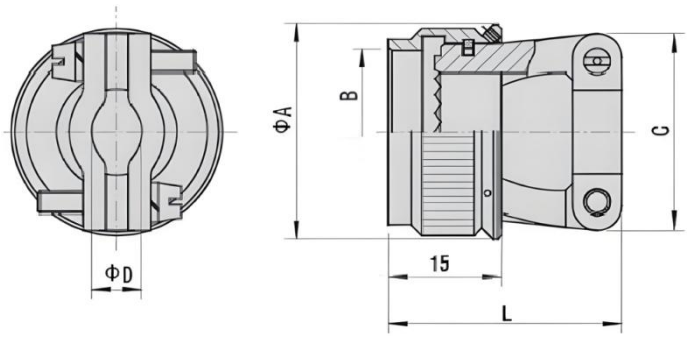

Anti-rotation, clamping cable accessories. It can tightly seal the wire body and clamp the cable function to ensure the environmental resistance of the connector, and is used for cable tension occasions.

Shell No.	A max	Thread B	C max	D min	D max	L max
09	19.0	M12×1	20.0	2.49	5.94	27.0
11	22.0	M15×1	21.0	3.87	5.94	28.5
13	25.1	M18×1	23.4	4.83	8.33	30.0
15	29.0	M22×1	26.6	6.60	11.61	31.5
17	32.1	M25×1	30.6	7.19	15.60	33.5
19	35.1	M28×1	34.0	8.26	16.10	36.6
21	38.1	M31×1	35.8	8.71	17.73	39.8
23	41.1	M34×1	39.0	9.68	20.90	42.9
25	44.1	M37×1	40.6	10.62	21.66	45.0

[J1784/38H a welding type straight cable clamp] (clamping cable and no shield accessories)

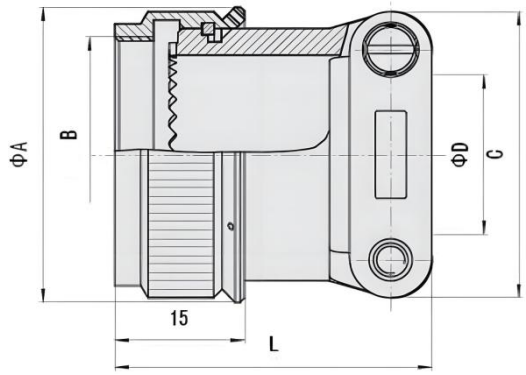

The function is the same as J1784/38, and it is matched with welding products.

Shell No.	A max	Thread B	C max	D min	D max	L max
09	19.0	M12×1	20.0	2.49	5.94	27.0
11	22.0	M15×1	21.0	3.87	5.94	28.5
13	25.1	M18×1	23.4	4.83	8.33	30.0
15	29.0	M22×1	26.6	6.60	11.61	31.5
17	32.1	M25×1	30.6	7.19	15.60	33.5
19	35.1	M28×1	34.0	8.26	16.10	36.6
21	38.1	M31×1	35.8	8.71	17.73	39.8
23	41.1	M34×1	39.0	9.68	20.90	42.9
25	44.1	M37×1	40.6	10.62	21.66	45.0

[J1784/39-Bend Cable Clamp] (Clamping Cable and Shielding Accessories)

	Shell	A	Thread	C	D	E	L

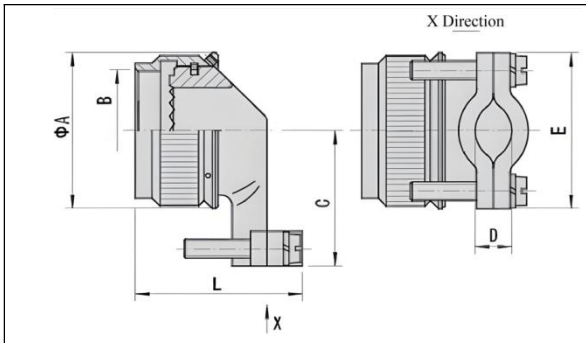

Anti-rotation, cable 90 °clamping cable accessories. It can clamp the wire body tightly and clamp the cable at 90 °to ensure the environmental resistance of the connector, and is used for cable tension occasions.

No.	max	B	max	min	max	max	max
09	19.0	M12×1	20.60	2.49	5.94	21.6	29.5
11	22.0	M15×1	22.00	3.87	5.94	22.8	29.5
13	25.1	M18×1	23.60	4.83	8.33	26.0	31.9
15	29.0	M22×1	25.20	6.60	11.61	29.0	35.1
17	32.1	M25×1	26.80	7.19	15.60	30.6	39.1
19	35.1	M28×1	31.30	8.26	16.10	37.0	41.5
21	38.1	M31×1	32.90	8.71	17.73	39.0	43.3
23	41.1	M34×1	34.50	9.68	20.90	41.0	46.5
25	44.1	M37×1	36.10	10.62	21.66	42.0	47.1

[J1784/16-Bend Cable Clamp] (Clamping Cable and Shielding Accessories)

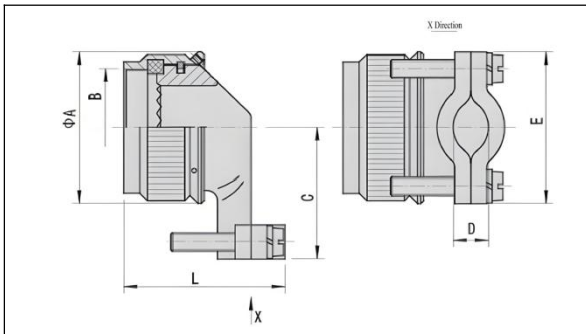

Anti-rotation, cable 90 °clamping cable accessories have the same function as J1784/39 accessories, and are larger than the outlet diameter (D) of J1784/39 accessories.

Shell No.	A max	Thread B	C max	D min	D max	E max	L max
09	19.0	M12×1	20.0	2.85	6.71	21	25.9
11	22.0	M15×1	21.5	6	9.96	26.5	29.2
13	25.1	M18×1	23.0	8.45	12.85	31.5	32
15	29.0	M22×1	25.0	12	16.03	36.5	35.2
17	32.1	M25×1	27.0	11.1	19.2	31	36.4
19	35.1	M28×1	28.5	13.75	21.46	37	40.7
21	38.1	M31×1	29.5	19.3	24.64	35	43.8
23	41.1	M34×1	31.0	21.4	27.81	35	43
25	44.1	M37×1	33.0	23.5	30.99	37	44.2

[J1784/38-× × NB] (clamping cable shielding accessories)

Not suitable for welding products

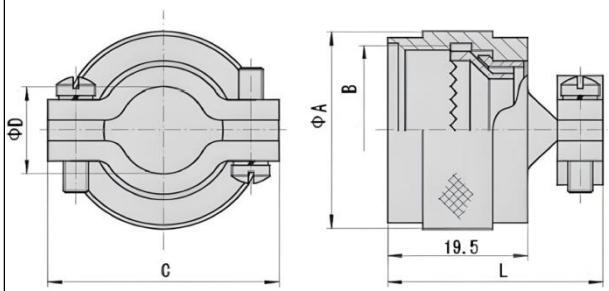

Accessory type	A	Thread B	C	D min	D max	L
J1784A/38-9NB	16.4	M12×1	18.6	3.5	5.7	29.2
J1784A/38-11NB	19.2	M15×1	20.6	5.0	7.9	29.2
J1784A/38-13NB	23.0	M18×1	24.5	7.4	11.4	29.2
J1784A/38-15NB	25.7	M22×1	26.0	9.0	12.9	29.8
J1784A/38-17NB	29.0	M25×1	33.0	12.8	17.0	31.0
J1784A/38-19NB	31.5	M28×1	36.3	13.2	17.9	32.0
J1784A/38-21NB	34.7	M31×1	39.0	14.8	21.1	32.0
J1784A/38-23NB	37.5	M34×1	41.4	16.4	24.3	32.0
J1784A/38-25NB	41.0	M37×1	44.5	18.0	27.5	32.0

[J1784/18-××N] (Clamping cable shielding accessories)

Company Code+Series Designation	DL+J1784/	18-	25	N	09	A

Type	18-Straight shielded cable clamp
Shell No.	Refer to Table 1
Shell plating	N-Electroless Nickel Plating W-Cadmium Plating Military Green S-Stainless Steel Passivation
Outlet caliber number	Please choose from Table 1 and Table 2
Length code	Refer to Table 3

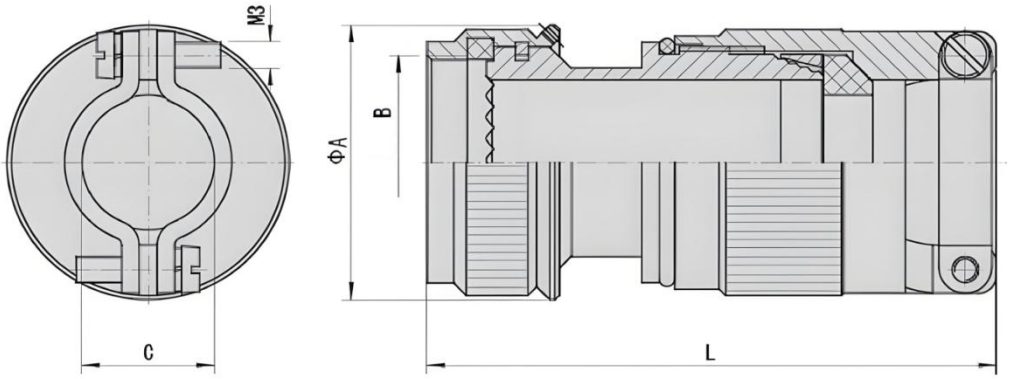

Anti-rotation, clamping shielding net and clamping cable accessories. It can tighten the wire sealing body, provide the connection function of shielding net and tail accessories, cable clamping and cable waterproof function to ensure the high environmental resistance and electromagnetic shielding performance of the connector, and is used in harsh environments. The cable accessories are available in different lengths, which can be applied to occasions where longer lengths of accessories are required such as high and low frequency mixing. The finished cable is recommended for this accessory.

Table 1

Shell No.	Optional outlet diameter number for each shell number	A	Thread B
09	01～02	19	M12×1
11	01~03	22	M15×1
13	02～04	25.1	M18×1
15	02~05	29	M22×1
17	02～06	32	M25×1
19	03～07	35	M28×1
21	03～08	38	M31×1
23	03~09	41.1	M34×1
25	04~10	44.1	M37×1

Table 2

Outlet caliber number	Compatible cable diameter range (C)
01	1.57~3.18
02	3.18~6.35
03	6.35~9.53
04	9.53~12.7
05	12.7~15.88
06	15.88~19.05
07	19.05~22.23
08	22.23~25.4
09	25.4~28.58
10	28.58~31.75

Table 3

Shell No.	Length code	L
09~25	Standard (omitted)	64.4
09~25	A	89.8
15~25	B	115.2
21~25	C	140.6

Composite Rear Accessories

[Model naming]

Company Code+Series Designation	DL+J1784/	91-	15	J

Type	20-Shielded tail accessories 91-Straight cable clamps (for crimping products only) 91H-Straight cable clamp (for welding and crimping products) 92-Curved cable clamp
Shell No.	09-11-13-15-17-19-21-23-25
Shell plating	**J**-Cadmium plated military green **M**-Electroless nickel plating

[J1784/20 × × J (composite material)] (shielded unclamped cable accessories)

Not suitable for soldered electrical connectors, only suitable for crimp electrical connectors.

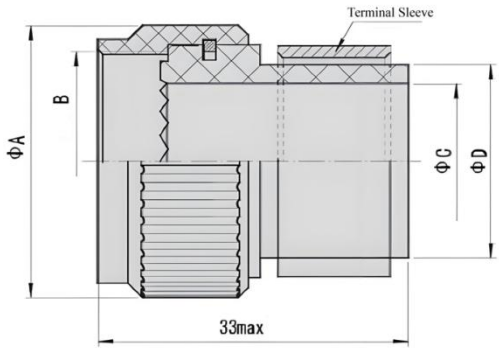

Shell No.	A	Thread B	C	D
09	21.8	M12×1	6.73	12.65
11	25	M15×1	8.71	12.95
13	29.5	M18×1	11.1	16
15	32.5	M22×1	14.27	19.3
17	35.5	M25×1	17.45	22.61
19	38.5	M28×1	20.62	25.65
21	41.5	M31×1	23.8	28.7
23	45	M34×1	26.57	30.53
25	48	M37×1	28.58	34.52

[J1784/91- × × J (composite material)] (clamped cable unshielded accessories)

Not suitable for soldered electrical connectors, only for crimp electrical connectors.

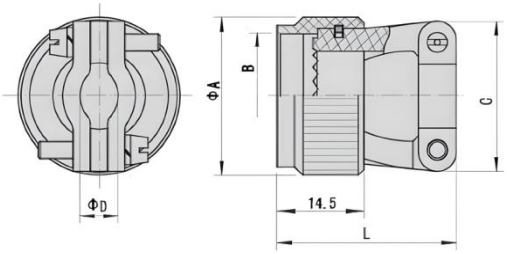

Shell No.	A max	Thread B	C max	D min	D max	L max
09	21.8	M12×1	20.0	4.00	5.94	27.0
11	25	M15×1	20.0	4.00	5.94	28.5
13	29.5	M18×1	23.4	4.83	8.33	30.0
15	32.5	M22×1	26.6	6.60	11.61	31.5
17	35.5	M25×1	30.6	7.19	15.60	33.5
19	38.5	M28×1	34.0	8.26	16.10	36.6
21	41.5	M31×1	35.8	8.71	17.73	39.8
23	45	M34×1	39.0	9.68	20.90	42.9
25	48	M37×1	40.6	10.62	21.66	45.0

[J1784/91H- × × J (welding type, composite material)] (clamped cable unshielded accessories)

Compatible with soldered and crimped electrical connectors.

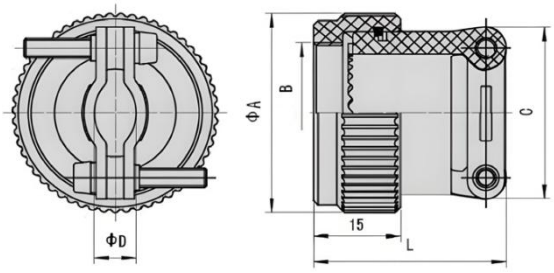

Shell No.	A max	Thread B	C Max	D Min	D Max	L Max
09	21.8	M12×1	20.0	4.00	5.94	27.0
11	25	M15×1	20.0	4.00	5.94	28.5
13	29.5	M18×1	23.4	4.83	8.33	30.0
15	32.5	M22×1	26.6	6.60	11.61	31.5
17	35.5	M25×1	30.6	7.19	15.60	33.5
19	38.5	M28×1	34.0	8.40	16.10	36.6
21	41.5	M31×1	35.8	8.80	17.73	39.8
23	45	M34×1	39.0	9.80	20.90	42.9
25	48	M37×1	40.6	10.60	21.66	45.0