

principle characteristics

The float guide bar is equipped with a magnetic ring, and the float moves with the liquid level, which triggers an external magnetic strip displacement sensor to measure the liquid level in real time.
Top mounting, compact structure, reliable performance, good repeatability, long life.

product application

Used for liquid level measurement with density ⩾0.75g/cm^3

Technical parameters
◇ Measuring stroke: 100~500mm
◇ Medium temperature: -20°C... 120 °C
◇ Medium density: ⩾0.75g/cm
◇ Output: analog
◇ Protection grade: IP67
◇ Connection mode: directly attached 2m wire
◇ Material:
Float: stainless steel
Body: Alumina
Display window: Engineering plastic

Size drawing (mm)

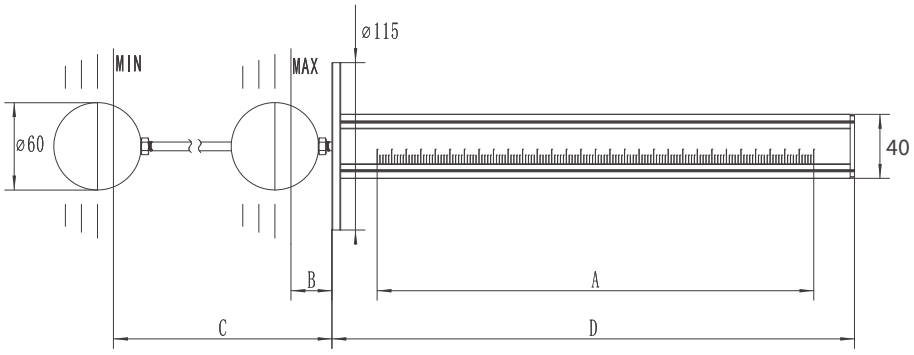

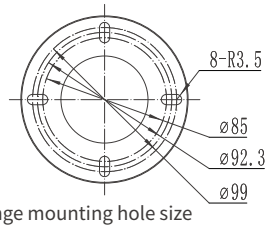

Flange mounting hole size

Recommended opening size
60 floating ball 65 mm
80 floating ball 85 mm

wiring diagram

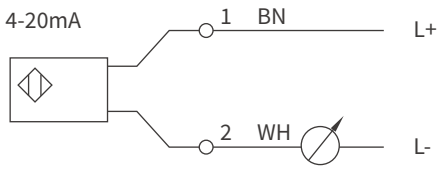

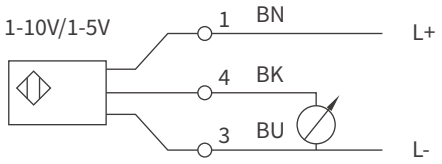

Selection table

LC230-	L300	A	D6	expatiate	
LC230				Panel float type liquid level sensor	
	L100			Measuring range:100mm	
	L200			Measuring range:200mm	
	L300			Measuring range:300mm	
	L400			Measuring range:400mm	* 80 float ball must be selected
		A		Output signal: Two-wire system (4-20mA)	
		V5		Output signal: Three-wire system (1-5V)	
		V10		Output signal: Three-wire system (1-10V)	
			D6	Float ball: ϕ 60mm	
			D8	Float ball: ϕ 80mm(Oily medium must use 80mm float)	