

Product overview

The LC220 float level switch greatly improves the accuracy of level perception. Its detection distance is 8mm, which is larger than the 5mm detection range of other brands sold on the market, which can greatly reduce the problem of detection errors. The induction magnet is higher than the general iron oxide 400 gauss.

The LC220 uses 1200 Gauss magnets to achieve zero error sensing. LC220 is made of aluminum alloy, and T5 heat treatment, and the appearance is anodized to make it bright and bright. Induction switch can choose A or B contact, voltage DC24V, and adjustable stop pay ring, can arbitrarily adjust the length of the float stick.

Technical parameter

- ◇ Power supply: 5V~240VAC/DC
- ◇ Maximum switching current: 100mA
- ◇ Maximum contact capacity: 10W Max
- ◇ Internal residual voltage: 2.5V Max.@100mA DC
- ◇ Maximum switching frequency: 200Hz
- ◇ Impact resistance: 50G
- ◇ Operating temperature: -10°C~70°C
- ◇ Storage temperature: -20°C~80°C
- ◇ Protection level: IP64
- ◇ Specifications: CE certification, RoHS

Size drawing (mm)

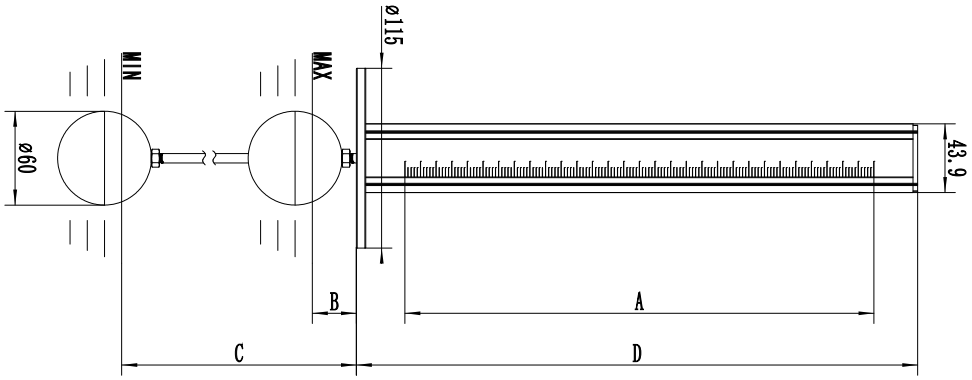

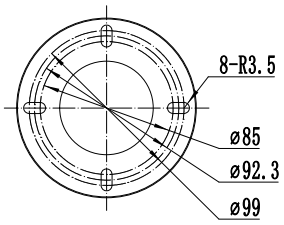

Flange mounting dimension

Recommended hole size
60 float 65mm
80 float ball 85mm

Model	range A	Upper limit height B	Lower limit height C	Body total height D
LC220-1	100	50	150	160
LC220-2	200	50	250	260
LC220-3	300	50	350	360
LC220-4	400	50	450	460

wiring diagram

1. General wiring mode

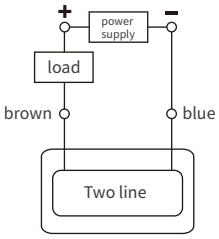

2、Series connection mode

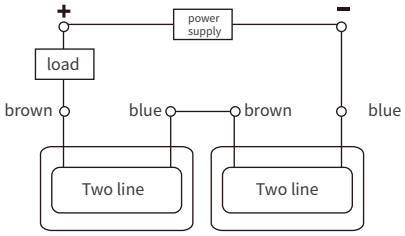

3、Parallel connection mode

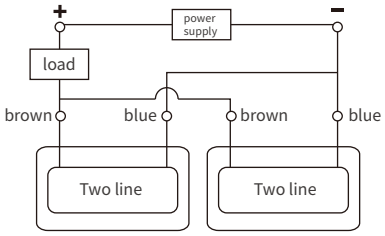

Selection list

LC220-	1	D6	S2	2	-	Detailed description
LC220-						Float level switch
	1					Liquid level stroke: 100mm
	2					Liquid level stroke: 200mm
	3					Liquid level stroke: 300mm
	4					Liquid level stroke: 400mm
		D6				Float ball diameter: 60mm (for cutting fluid)
		D8				Float ball diameter: 80mm (for cutting oil)
			-			No output unit
			S1			One switch unit
			S2			Two switch units
			S3			Three switch units
			S4			Four switch units
				2		Outgoing line length: 2m(factory standard configuration)
				3		Outgoing line length: 3 meters
				5		Outgoing line length: 5 meters
					-	Default reed switch (two-wire system)
					P	PNP three-wire electronic switch
					N	NPN three-wire electronic switch
All switch units are normally open signals						