High precision gear meter FM510



product principle

The FM510 gear flow sensor is built with double gears, which can calculate the volume of medium through the volume of high precision gear wheel and measure the fluid medium with small size. It is a new type of volumetric flow sensor, which is used to measure the flow or instantaneous flow of liquid in a pipe precisely continuously or intermittently.

product application

The FM510 gear flow sensor is widely used for precise low-flow measurement in various industries. It is suitable for media such as additive fuels, flotation cells in water treatment, corrosion inhibitors, catalysts, emulsifiers, oils, fats, fragrances, adhesives, solvents, inks and insecticides, as well as some high-viscosity media. The application industries include automobiles, aviation, mining, power, chemical engineering, pharmaceuticals, food, coatings, petroleum, environmental protection, printing and other industries. It is particularly suitable for heavy oil. Flow measurement of media with high viscosity such as polyvinyl alcohol and resin.(Capable of measuring fluids with viscosity up to 10,000 pa.s) Small in volume, light in weight, low vibration and noise during operation, and stable in operation. It can also be used for measuring the tiny flow rate of small pipe diameters. It has a small starting flow rate, a wide range ratio, and is suitable for measuring the flow of liquids with large fluctuations. The measurement accuracy is not affected by pressure and flow rate changes. It features stable performance, long service life, and large flow capacity.

- Resin and glue measurement
- Measurement of hydraulic oil, lubricating oil and grease
- Fuel oil measurement
- Ink and asphalt measurement
- Measurement of liquid nitrogen, refrigerant and solvent
- Edible oil, fish oil
- Fluid measurement for chemical and anti-corrosion requirements

Product features

- pulse/analog double output
- high pressure (10~400bar)
- high and low temperature resistance (-30°C...120°C)
- various viscous media can be measured
- high precision and repeatability
- range specific width (1:100)
- wide measurement range
- strong anti-corrosion and anti-pollution ability (acid and alkali)

Technical parameters

◇ Measurement range:	See range table	◇ Medium temperature:	-30~120°C(High-temperature customization: 150°C)
◇ Output signal:	4-20mA,PNP/NPN	◇ Voltage withstand capability:	Aluminum (40 bar);
◇ Measurement accuracy:	0.5%F.S		Stainless steel (100 bar / 250 bar / 400 bar);
◇ Reproducibility:	0.1%F.S		PP (with pressure resistance of 10 bar)
◇ Power supply:	16~30VDC	◇ Material:	Shell: Aluminum, Stainless steel, Display: Stainless steel

wiring diagram

Hersman plug connection method	M12 aviation plug connection
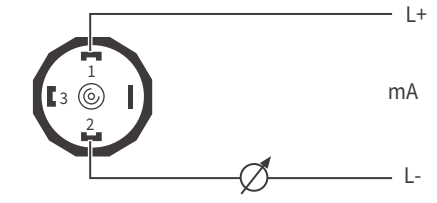	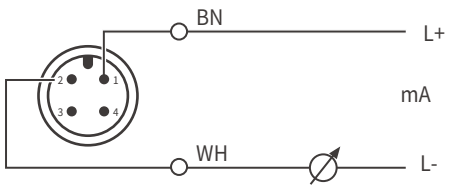
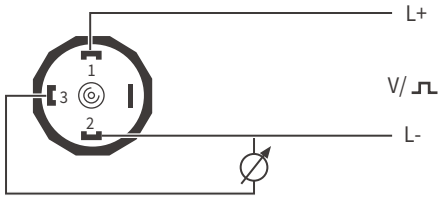	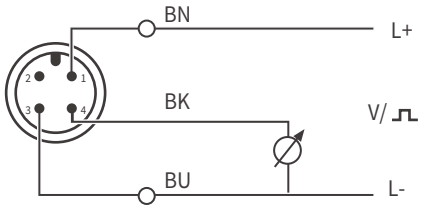

Dimension drawing (mm)

Hersman

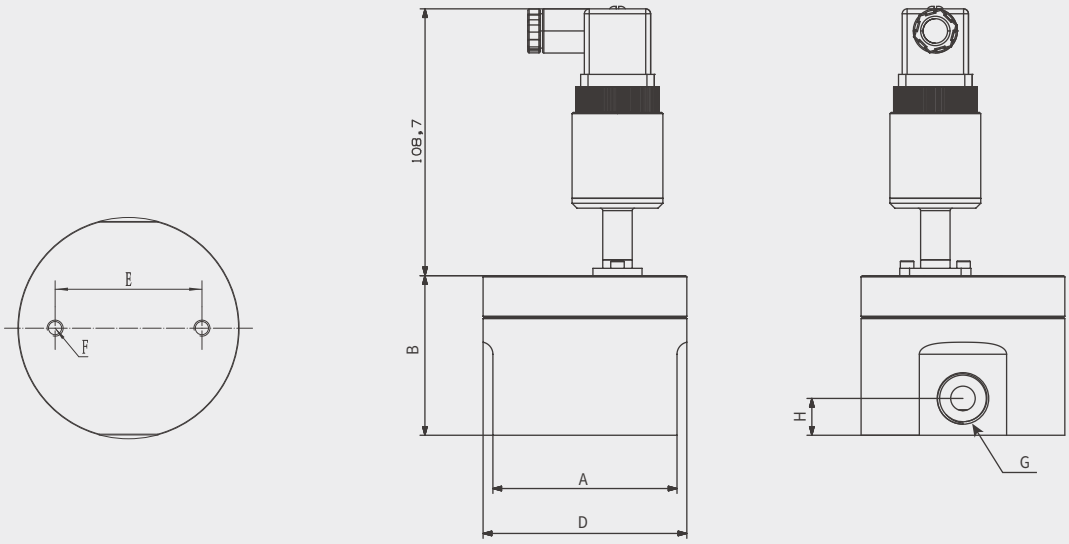

Aviation plug

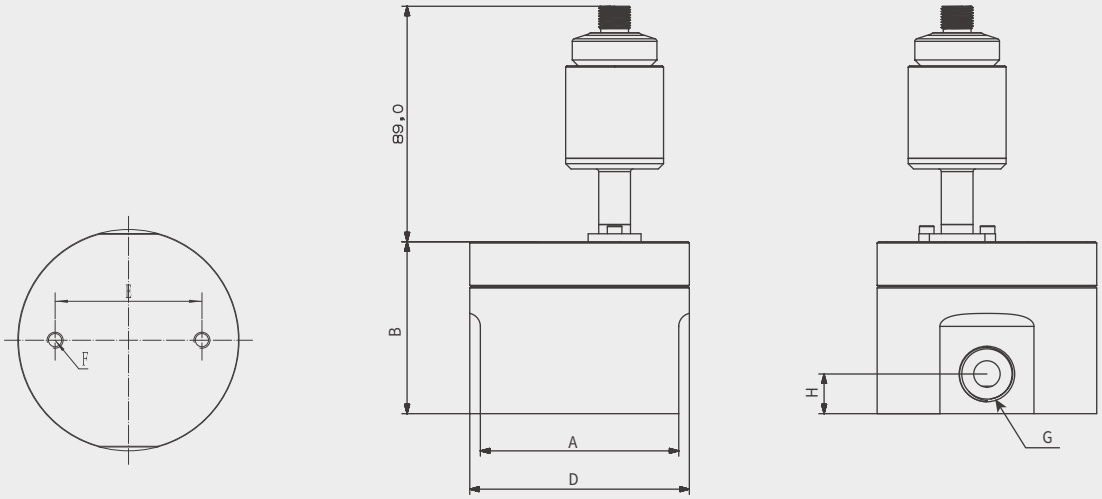

model	A	B	D	H	E	F	G	Measuring range
M 2	80	55	83	16	40	2*M 6	G1/4	50-2000mL/min
M 2S	83	43	88	10	44	2*M 5	G1/4	5-2000mL/min
M 4	80	55	83	16	55	2*M 6	G3/8	0.1-4L/min
M 6	80	62	83	14	55	2*M 6	G1/2	0.15-8L/min
M 10	80	65	83	14	55	2*M 6	G1/2	0.5-20L/min
M 15	110	65	113	28	90	2*M 6	G3/4	2-50L/min
M 25	124	70	138	29	100	2*M 8	G1''	5-150L/min

Selection table

FM510-	M2	A	F	L	-	-	Explanation
FM510-							High-precision gear flowmeter
	M2						Measurement range: 50 - 2000 mL/min
	M2S						Measurement range: 5 - 2000 mL/min (pressure resistance < 150 bar)
	M4						Measurement range: 0.1 - 4 L/min
	M6						Measurement range: 0.15 - 8 L/min
	M10						Measurement range: 0.5 - 20 L/min
	M15						Measurement range: 2 - 50 L/min
	M25						Measurement range: 5 - 150 L/min
		P					Output signal: Pulse output
		A					Output signal: 4-20mA two-wire output (M2S not available)
			F				Sealing material: FKM (standard type)
			P				Sealing material: PTFE polytetrafluoroethylene (anti-corrosion type)
				L			Body material: Alumina (pressure resistance 40 bar)
				S			Body material: 304SS (pressure resistance 100 bar)
				S1			Body material: 304SS (pressure resistance 250 bar) (M2S not available)
				S2			Body material: 304SS (pressure resistance 400 bar) (M2S not available)
				S3			Body material: 316SS (pressure resistance 100 bar) (M2S not available)
				S4			Body material: 316SS (pressure resistance 250 bar) (M2S not available)
				S5			Body material: 316SS (pressure resistance 400 bar) (M2S not available)
				P			Body material: PP (pressure resistance 10 bar)(M2S not available)
					-		Medium temperature < 120°C
					T		Medium temperature < 140°C Note: The aluminum/PP material does not support the high-temperature option
						-	Connection method: Hirschmann plug (default at factory)
						M	Connection method: M12*1 aviation plug

Flow calculation method

The K coefficient (flow coefficient) of the FM510 gear flow sensor accurately defines the number of pulses per liter per unit flow.

Q = f * 60 / K

Q= instantaneous flow litres per minute

F= output pulse frequency HZ

K= coefficient pulse of gear flowmeter/min

Optional accessories - electrical accessories(Factory standard:ZL02-PC02G-P)

name	Outline drawing/dimension drawing(mm)	material	model
M12*1-4Pin (2m cable)	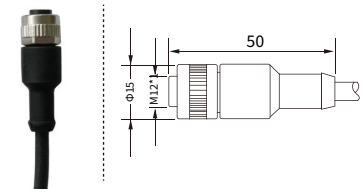	PUR	ZL02-PU02G-P
M12*1-4Pin (5m cable)			ZL02-PU05G-P
M12*1-4Pin (10m cable)			ZL02-PU010G-P
		PVC	ZL02-PC02G-P
			ZL02-PC05G-P
			ZL02-PC010G-P
M12*1-4Pin (2m cable)	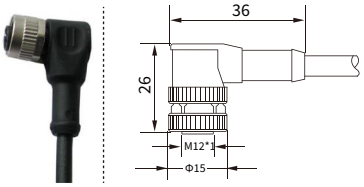	PUR	ZL02-PU02W-P
M12*1-4Pin (5m cable)			ZL02-PU05W-P
M12*1-4Pin (10m cable)			ZL02-PU010W-P
		PVC	ZL02-PC02W-P
			ZL02-PC05W-P
			ZL02-PC010W-P

M12* 1-4pin self-connector/size drawing(mm)	model
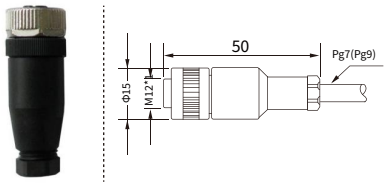	GL04 (4Pin joint)
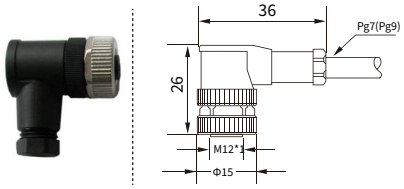	WL04 (4Pin joint)

Optional accessories - electrical accessories(Factory standard:ZL03-PC02G)

name	Outline drawing/dimension drawing(mm)	material	model
M12*1-4Pin (2m cable)	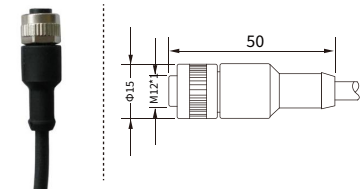	PUR	ZL03-PU02G
M12*1-4Pin (5m cable)			ZL03-PU05G
M12*1-4Pin (10m cable)			ZL03-PU010G
		PVC	ZL03-PC02G
			ZL03-PC05G
			ZL03-PC010G
M12*1-4Pin (2m cable)	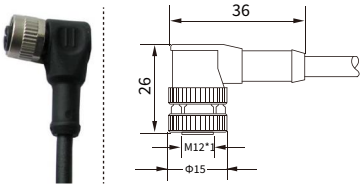	PUR	ZL03-PU02W
M12*1-4Pin (5m cable)			ZL03-PU05W
M12*1-4Pin (10m cable)			ZL03-PU010W
		PVC	ZL03-PC02W
			ZL03-PC05W
			ZL03-PC010W