DELCO®
VALVE

INSTRUCTION MANUAL

Precision Control | Reliable Performance | Built to Last

Electric 3-Way Threaded Ball Valve



DELCO®
VALVE

Electric 3-Way Threaded Ball Valve

Introduction

The ball inside the threaded electric three-way ball valve is divided into L-shaped and T-shaped. The electric actuator is used to drive the ball to rotate 90 degrees to achieve directional control, or to rotate 180 degrees to achieve directional control and merging control. The direct connection between the actuator and the valve body reduces the probability of failure. The flange connected pipeline can maintain good sealing performance, facilitate maintenance and replacement, and facilitate the closure of the pipeline. The threaded electric three-way ball valve has excellent sealing performance, high flow coefficient, low flow resistance coefficient, simple structure, long service life, and is easy to maintain.

Technical Parameters

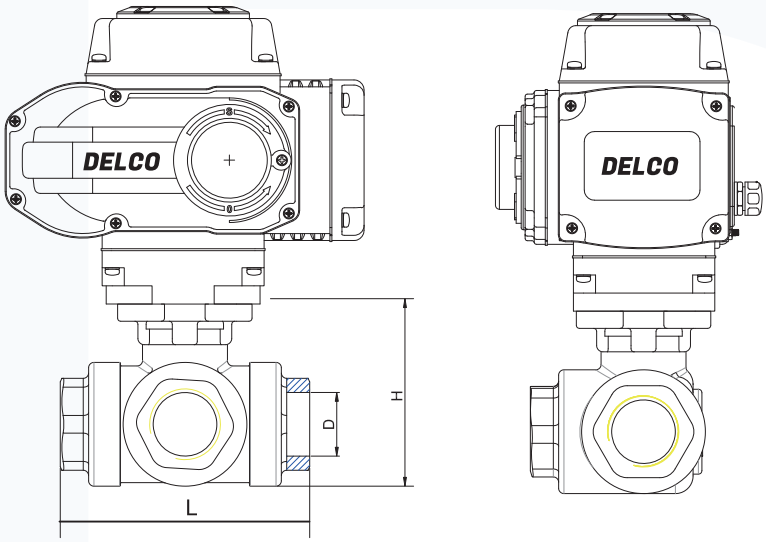

UNIT:mm

No.	Name	Material
01	Electric Actuator	ON/OFF、Regulation Multi-Turn、Explosion-Proof
02	Hand Gear	Plastic
03	Connecting Set	Stainless Steel 304
04	Stem	Stainless Steel 304、304L、316、316L
05	Screw	Stainless Steel 304、316L
06	Gland	Stainless Steel 304、316L
07	Packing	PTFE
08	Ball	Cast Iron、WCB、Stainless Steel
09	Seat	PTFE、Nylon、PPL、H/Y
10	Body	Stainless Steel CF8、CF8M、CF3、CF3M
11	Body	Stainless Steel CF8、CF8M、CF3、CF3M

Flow Direction Diagram of Three-Way Ball Valve

T-Pattern Flow Direction Diagram

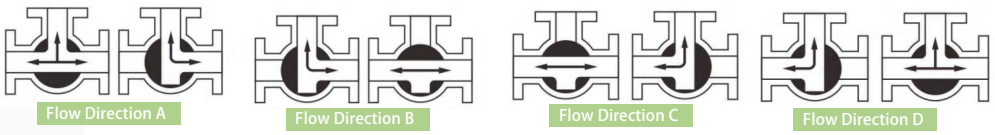

L-Pattern Flow Direction Diagram

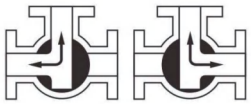

Dimension

UNIT:mm

MODEL	DN08	DN10	DN15	DN20	DN25	DN32	DN40	DN50	DN65
G	1/4″	3/8″	1/2″	3/4″	1″	1-1/4″	1-1/2″	2″	2-1/2″
D	10	12	12	15	20	25	32	38	48.5
L	71	71	74	88	92	124	138	154	180
H	56	56	58	60	70	82	95	100	180

Electric Actuator

ON/OFF Type	Feedback: the active contact signal, passive contact signal, resistant, 4-20mA
Regulation Type	Input & Output signal: DC 4-20mA, DC 0-10V, DC 1-5V
Intelligent Type	Input & Output signal: DC 4-20mA, DC 0-10V, DC 1-5V
Field Operation	The field, remote control switch regulation and MODBUS, PROFIBUS field bus
Voltage optional	AC 110-240V 380V 50/60Hz; DC12V,DC24V,Special voltage can be customized
Protection Class	IP65



Manual Override


ON/OFF Type


Regulation Type


Intelligent Type

Main Functions and Key Features

- Body: The body material is hard aluminum alloy, which is treated by hard anodic oxidation and coated by Polyester powder, enabling great corrosion resistance and water-proof protection of IP65 or even higher.
- Motor: A fully enclosed cage-type motor is small in size and inertia, and large in torque. insulation class F grade which can preven Motor over-heating.
- Manual Override: The small handle is reliable and energy-saving. It can be used for manual operation when electricity is off and can be fixed inside the clip for easy operation in automatic operation;
- Indicator: The indicator is assembled on the center axis, valve position can be observed.Outside mirror design facilitates position observation and prevents water drops accumulation:
- Enclosure: With high sealing performance, standard protection class is IP65;
- Limit Switches: Mechanical and electronic position limit switches.Mechanical stop screws can be adjustable; Electronic limit switches can be controlled by a cam.Adjusting the can without any influence by the handle,the position can be set easily and accurately;
- Self Lock: Accurate turbo-worm structure can output large torque with high efficiency and little noise (Max. 50 decibels). Service life is quite long and its self-lock function can stop reversing rotation. The drive part is stable and reliable without additional lubrication;
- Captive Bolt: Bolts won't fall off with disassembled cover;
- Application: The bottom connection complies with 1S05211/DIN3337 Standard. Its star square hole is easy for square valve stem linear or 45° rotation application; Both vertical and horizontal assemble are available;
- Diagram: The control diagram complies with single phase or three phase wiring standard,a reasonable wiring diagram and connection terminal can meet requirements of other optional functions.

Outline Size Dimension

05 Dimension

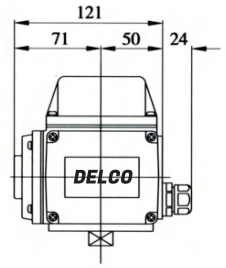

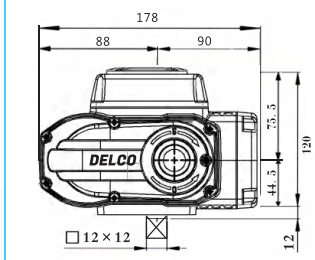

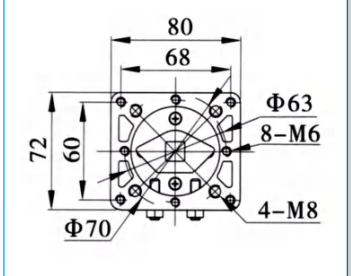

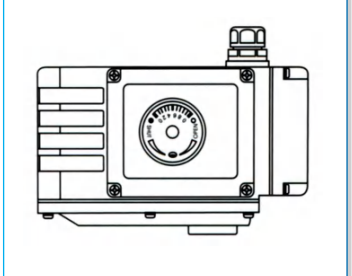

10/16 Dimension

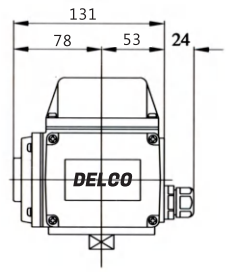

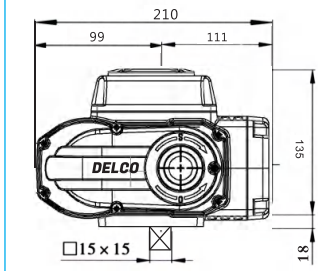

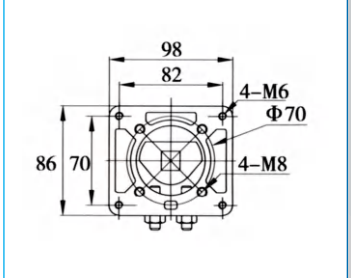

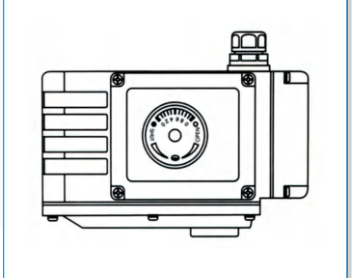

30/60 Dimension

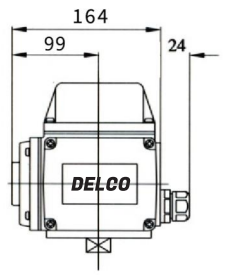

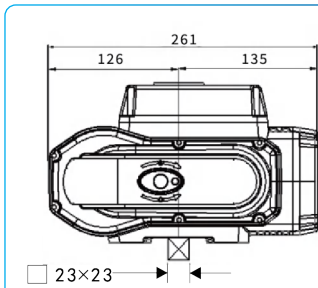

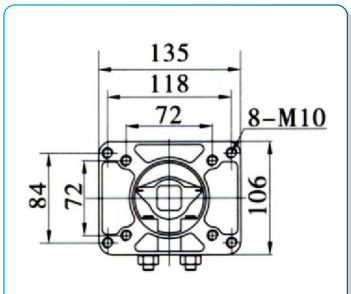

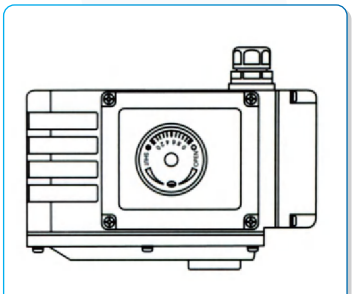

125/250/400 Dimension

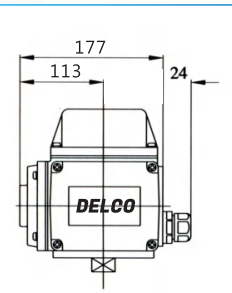

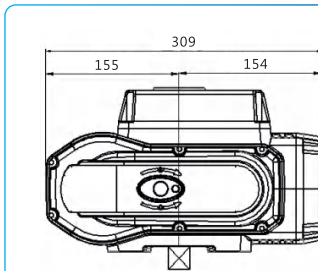

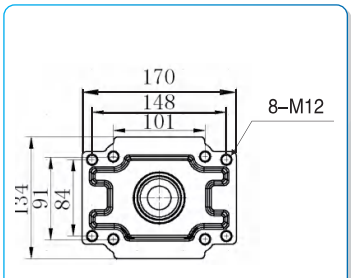

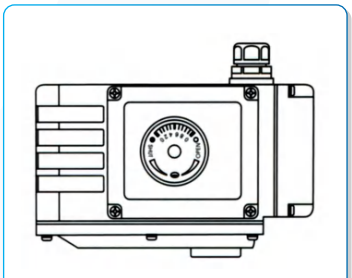

Technical Parameters of Electric Actuator

performanceindication of on/off electric actuator

Performance \ Item		05	10	16	30	60	125	250	400
Angle of Rotation		0-90°	0-90°	0-90°	0-90°	0-90°	0-90°	0-90°	0-90°
AC220V AV Voltage	Torque Output	50Nm	100Nm	160Nm	300Nm	600Nm	1250Nm	2500Nm	4000Nm
	90° Cycle Time	10S/20S/60S	15S/30S/60S			30S/60S	90S	90S	90S
	Working Current	0.23A	0.35A	0.40A	0.45A	0.60A	1.03A	1.85A	2.70A
	Drive Motor	50W	75W	80W	100W	130W	210W	285W	360W
	Voltage Options	AC220V AC110V AC24V							
	Control Circuit	B:ON/OFFType with Passive Contact Signal Feedback							
DC DC Voltage	Torque Output	60Nm	100Nm	170Nm	330Nm	680Nm	1300Nm	2500Nm	
	90° Cycle Time	8S	11S	11S	9S	35S	32S	32S	
	Starting Current	0.74A	1.40A	1.40A	3.80A	7.0A	3.8A	4.3A	
	Working Current	0.38A	0.38A	0.40A	1.03A	0.70A	1.2A	1.4A	
	Drive Motor	9.5W	9.0W	9.6W	30W	33W	30W	33W	
	Voltage Options	DC12V DC24V DC110V DC220V							
	Control Circuit	F:DC24V/ DC12V Direct ON/OFF Type							
AC380V	Torque Output	70Nm	100Nm	200Nm	300Nm	600Nm	1300Nm	2500Nm	
	90° Cycle Time	20S	27S	27S	25S	26S	50S	50S	
	Starting Current	0.20A	0.28A	0.30A	0.55A	0.45A	0.60A	0.77A	
	Working Current	0.16A	0.25A	0.27A	0.53A	0.43A	0.65A	0.75A	
	Drive Motor	51W	70W	77W	117W	220W	90W	103W	
	Voltage Options	AC380V							
	Control Circuit	G: AC380V Three-Phase Power Supply with Passive Signal Feedback (Default) H: AC380V Three-Phase Power Supply with Resistance Potentiometer Signal Feedback(Optional)							
Protection Class		IP65							
Ambient Temp		-30° C~+60° C							
Installation Angle		Any							
Electrical Connection		G1/2 Water-proof Cable Connectors, Electric Power Wire, Signal Wire							

Note: Can't connect one actuator parallel with other ones, in other words, can't use the same controller contact points to control two and above actuators, otherwise it will cause out-of-control, motor overheating, product damage, and shorter service life.

Technical Parameters of Electric Actuator

ON/OFF Type Performance characteristics

DELCO DK Series ON/OFF Type actuator has only two actions:0° or 90° when performing valve operations, which means that the valve can only be fully open orfully closed. Neither can control the amplitude of the valve switch nor the medium flow, the ON/OFF valve is generally used to switch the two positions.Its function is to open or close to conduct and cut off the working medium inside. There is no special requirement for the flow characteristics but the switching speed.The leakage requicement is higher than that of the regulating valve.

Voltage Options	AC110V,AC220V,AC380V,DC24V,AC24V
Insulation Resistance	100MQ/500V
Withstand Voltage	1500V; 1min
Control Circuit	A: ON/OFF Type with Light Indicator Signal Feedback B: ON/OFFType with Passive Contact Signal Feedback C:ON/OFFType with Resistance Potentiometer Signal Feedback D: ON/OFF Type with Resistance Potentiometer and Neutral Position Signal Feedback E: Regulation Type with Servo Control Module F: DC24V/ DC12V Direct ON/OFF Type G:AC380VThree-Phase Power Supply with Passive Signal FeedbackH: AC380V Three-Phase Power Supply with Resistance Potentiometer Signal Feedback
OptionalFunction	Over Torque Protectors, Dehumidify Heater, Stainless Steel Coupling & Yoke

Regulation type Performance characteristics

DELCO DK series Regulation type actuator has the function of a switch type integrated structureand relatively added the intelligent control module to accurately control the valve (any angle between 0° ~90°) , and adjust the medium flow. It can be controlled by an input or output signal of 4-10mA or 0-10V/1-5V.
The performance reflects its accuracy,which is generally within 1% of the error so that the opening and flow can be adjusted cery accuratey.

Voltage Options	AC110V,AC220V,AC380V,DC24V,AC24V
Input Signal	4-20mADC 1-5VDC0-10VDC
Output Signal	4-20mADC 1-5VDC0-10VDC
Tolerance	±0.5%
Return Difference	<0.3%
Dead Zone	0.1% to 1.6%
Damping Characteristics	0
Mechanical Repeatability Error	0%

Note: Can't connect one actuator parallel with other ones, in other words, can't use the same controller contact points to control two and above actuators, otherwise it will cause out-of-control, motor overheating, product damage, and shorter service life.

Wiring Diagram

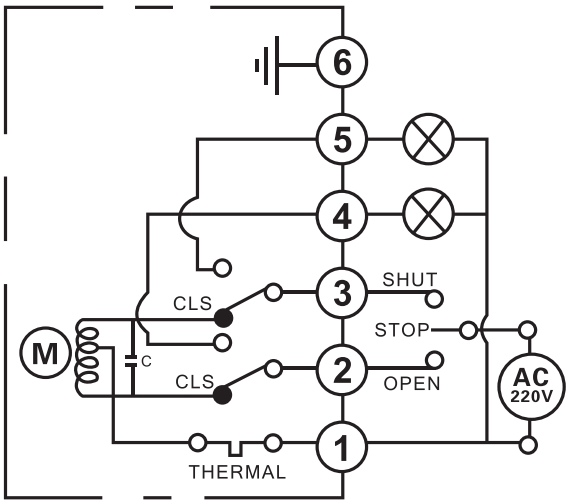

1. Open and close the valve to control the common end
2. Valve open
3. Valve closed
4. Full open signal
5. All off signal

Type A: Active contact
Limit position switch (Standard type)

Function: The channel switch circuit realizes the opening and closing operation, and outputs a group of active position models (fully open and fully cl -osed)

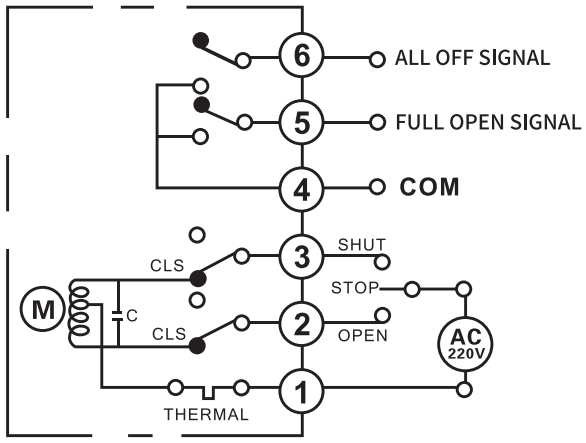

1. Open and close the valve to control the common end
2. Valve open
3. Valve closed
4. Signal common terminal
5. Full open signal
6. All off signal

Type B: Passive contact
With intermediate position switch

Function: The opening and closing operation is realized through the switching circuit, and a group of passive switching signals (fully open and fully closed) indicating the fully open and fully clo -sed position of the valve are output.

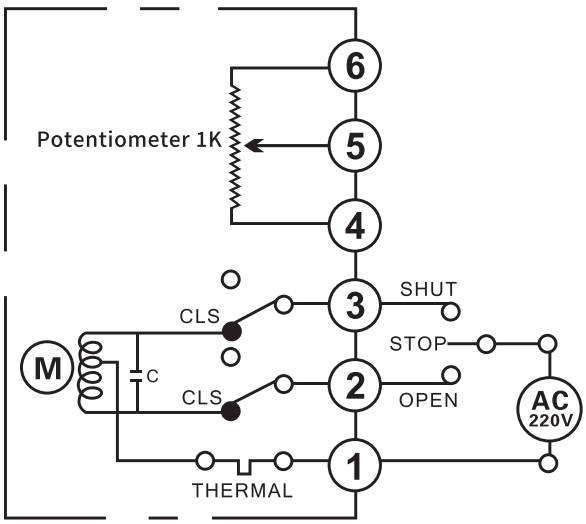

1. Open and close the valve to control the common end
2. Valve open
3. Valve closed

Type C: With potentiometer

Function: The opening angle of the valve is controlled through the switch circuit and the resistanc -e signal corresponding to the opening posi -tion is output.

Structure: with 1K Ω or 10K Ω potentiometer

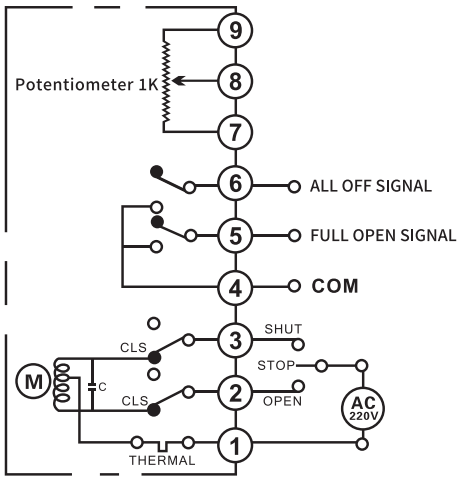

1. Open and close the valve to control the common end
2. Valve open
3. Valve closed
4. Signal common terminal
5. Full open signal
6. All off signal
7.8.9.1K Potentiometer

Type D: With potentiometer and interme diate position switch

Function: The opening and closing operation of the val -ve is realized through the switching circuit, a -nd a group of passive switching signals indic -ating the fully open and fully closed position -s of the valve are output. At the same time, t -he resistance signal corresponding to the va -lve switching angle is output.

Structure: with 1K Ω or 10K Ω potentiometer

Note: Can't connect one actuator parallel with other ones, in other words, can't use the same controller contact points to control two and above actuators, otherwise it will cause out-of-control, motor overheating, product damage, and shorter service life.

Wiring Diagram

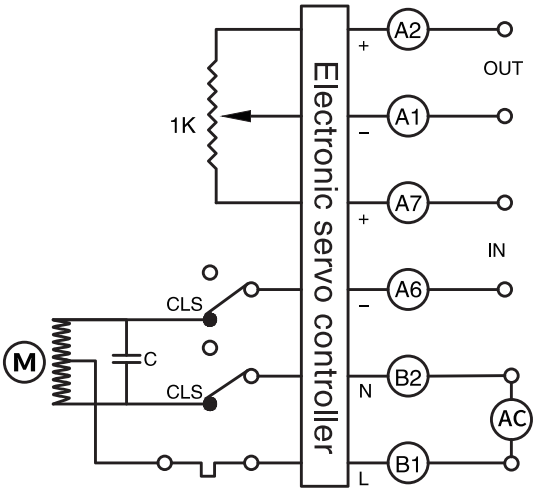

Type E: With control module (Adjustable)

Function: Regulation function: input 4-20 Madc / 1-5Vdc or 0-10Vdc signal and output 4-20Madc

Structure: with control module and 1K Ω potentiometer

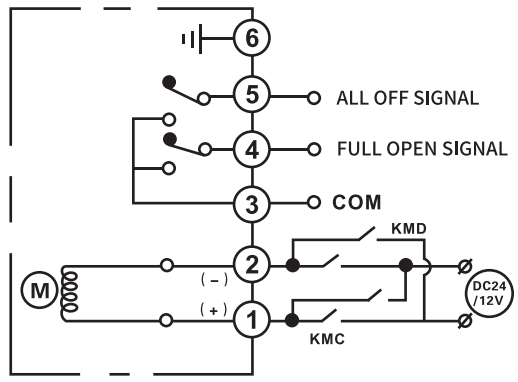

1. 2. Positive and negative revers -ing valve opening and clos -ing control
3. Signal common terminal
4. Full open signal
5. All off signal

Type F: Standard DC motor control circuit

Function: Through the external circuit, the positive and negative poles of the DC power supply are rev -ersed to realize the opening and closing oper -ation of the valve, and a group of passive sign -als indicating the fully open and fully closed position of the valve are output.

Structure: with two intermediate position switches

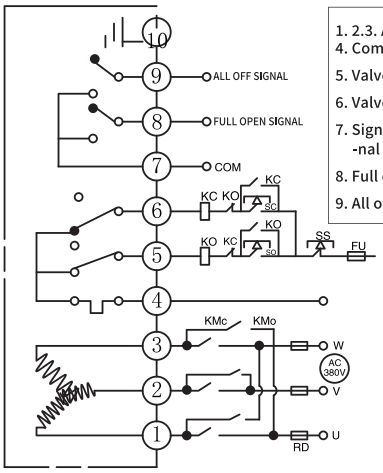

1. 2.3. AC380V motor lin
4. Common end
5. Valve opening contro
6. Valve closing control
7. Signal common termi -nal
8. Full open signal
9. All off signal

Type G: Three phase AC 380V motor cont -rol circuit

Function: Through the external phase inversion circuit, the forward and reverse rotation of the motor can realize the opening and closing operation of the valve, and output a group of passive sig -nals indicating the fully open and fully closed positions of the valve.

Structure: with two intermediate position switches

Be careful: When debugging the three-phase AC electric actuator, pay attention to whether the swit- ch direction is correct. If the direction is opp -osite, replace two of the power lines.

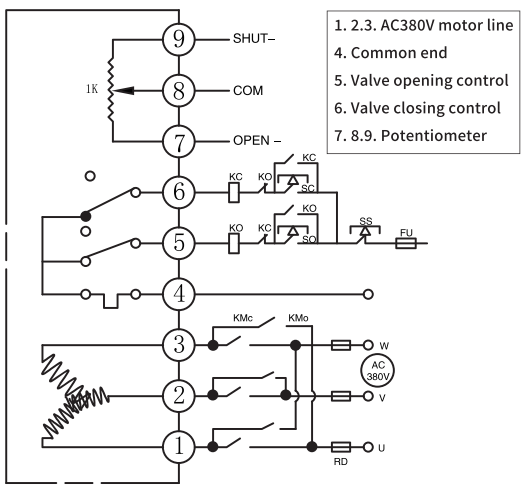

1. 2.3. AC380V motor line
4. Common end
5. Valve opening control
6. Valve closing control
7. 8.9. Potentiometer

Type H: Three phase AC 380V with potentiometer

Function: Through the external phase inversion circuit, make the motor forward and reverse to reali -ze the opening and closing operation, and output the resistance signal corresponding to the switch position.

Structure: with 1K Ω or 10K Ω potentiometer

Be careful: During commissioning of three-phase AC ele -ctric actuator, pay attention to whether the switch direction is correct. If it is found that the direction is opposite. When, replace two of the power lines.

Note: Can't connect one actuator parallel with other ones, in other words, can't use the same controller contact points to control two and above actuators, otherwise it will cause out-of-control, motor overheating, product damage, and shorter service life.

Wiring Diagram

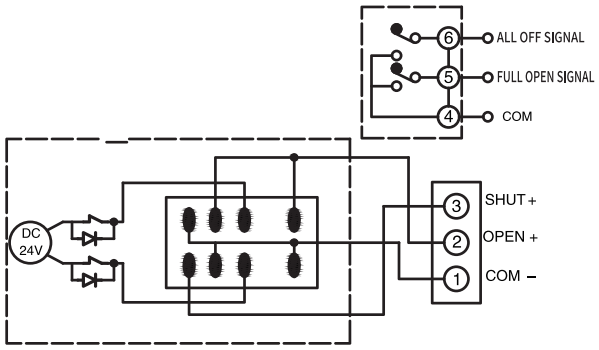

Type I: DC three wire control

Function: Switch the positive and negative poles of the motor through the intermediate relay to rea -lize the opening and closing operation of the valve, and output a group of passive signals indicating the fully open and fully closed pos -itions of the valve.

Structure: with two intermediate position switches and intermediate relays

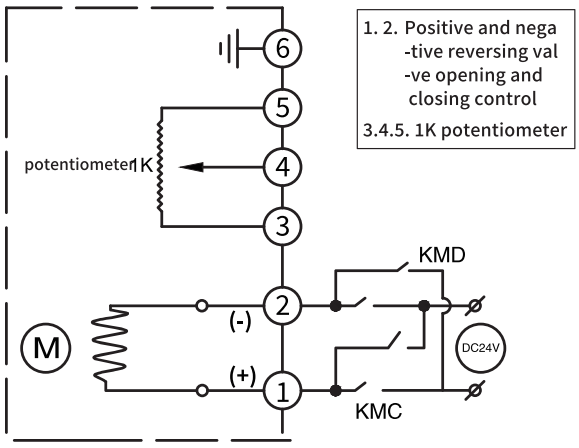

Type J: DC power supply with potentiometer

Function: The positive and negative poles of the DC po -wer supply are reversed through the exter- nal circuit to realize the opening and closing operation of the valve, and the resistance si- gnal corresponding to the opening position is output.

Structure: with 1K Ω or 10K Ω potentiometer

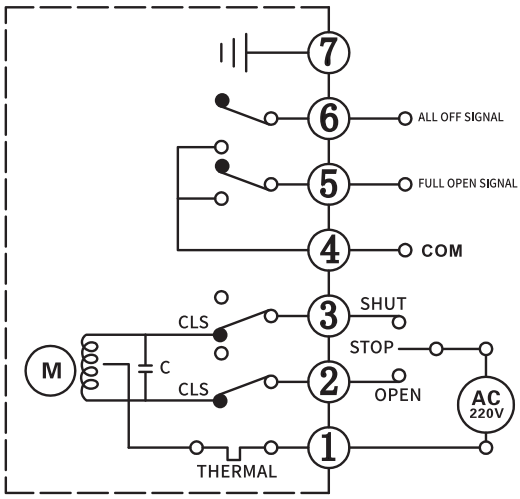

Type K: Passive contact with grounding protection

Function: he opening and closing operation of the valve is realized through the switch circuit, and a group of passive signals indicating the fully open and fully closed position of the valve are output, with a grounding protection in -terface.

Structure: with two intermediate position switches

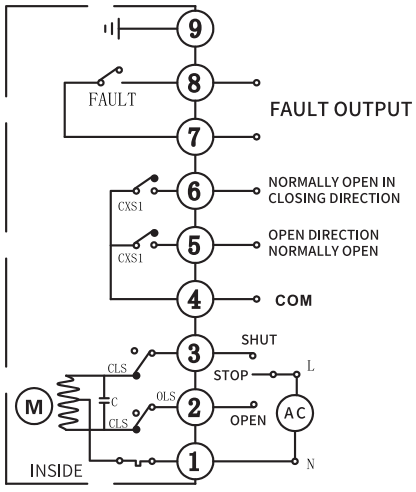

Type L: With fault output

Function: It controls the opening and closing of the va -lve through the switch circuit, and outputs a group of passive signals indicating the full opening and full closing position of the valve. At the same time, it is attached with a group of fault output indication signals to avoid the locked rotor of the actuator and protect the normal operation of the actuator.

Structure: Add a group of switches on the basis of the original middle position switch

Note: Can't connect one actuator parallel with other ones, in other words, can't use the same controller contact points to control two and above actuators, otherwise it will cause out-of-control, motor overheating, product damage, and shorter service life.

Wiring Diagram

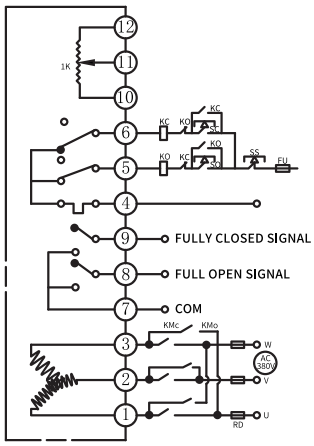

Type M: Three-phase AC 380V, with potentiometer and passive contact

Function: Through the external phase inversion circuit, the forw -ard and reverse rotation of the motor can realize the opening and closing operation of the valve, output th -e resistance signal corresponding to the opening pos -ition, and output a group of passive position signals at the same time.

Structure: With intermediate position switch and 1K Ω or 10K Ω potentiometer

Be careful: When debugging the three-phase AC electric actuat -or, pay attention to whether the switch direction is correct. If the direction is opposite, replace two of t- he power lines.

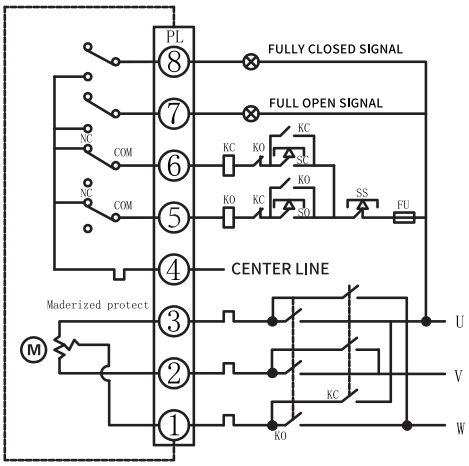

Type N: Three-phase AC 380V with source contact

Function: Through the external phase inversion circuit, the forward and reverse rotation of the motor can realize the opening and closing operation of the valve, and output a group of active posi -tion signals (fully open and fully closed).

Be careful: When debugging the three-phase AC electric actuator, pay attention to whether the swit- ch direction is correct. If the direction is opp -osite, replace two of the power lines

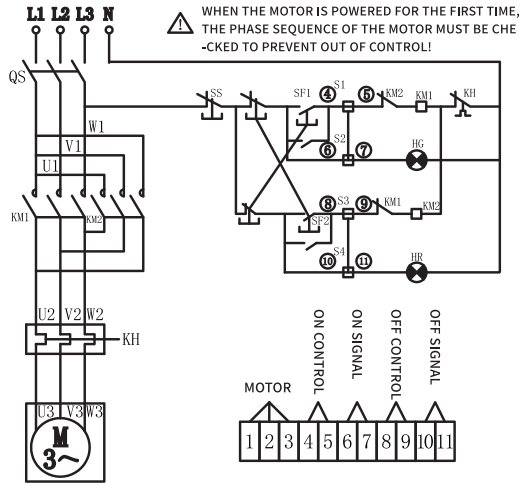

Type O: Three-phase AC 380V with normally open and normally closed contacts

Function: Through the external phase inversion circuit, the forward and reverse rotation of the motor can realize the opening and closing operation of the valve. The circuit is provided with a pair of independent normally closed contacts and a pair of independent normally open contacts.

Structure: With independent normally open and normally closed contacts.

Be careful: When debugging the three-phase AC electric actuat -or, pay attention to whether the switch direction is correct. If the direction is opposite, replace two of the power lines.

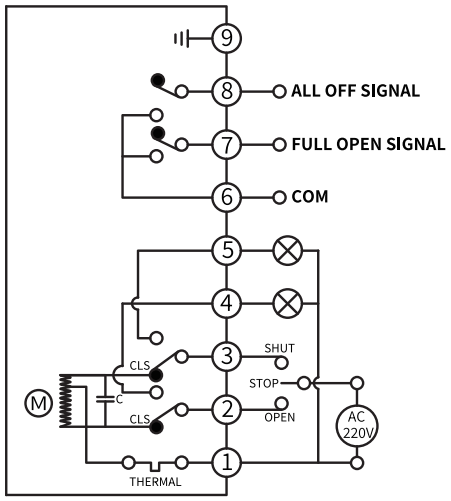

Type P: With source and passive double contact signal

Function: The opening or closing operation is realized thr -ough the switch circuit, and a group of active position signals (fully open and fully closed) an -d a group of passive switch signals (fully open and fully closed) are output at the same time, with grounding protection.

Structure: with two intermediate position switches

Note: Can't connect one actuator parallel with other ones, in other words, can't use the same controller contact points to control two and above actuators, otherwise it will cause out-of-control, motor overheating, product damage, and shorter service life.

Installation Instruction

Installation environment

- The product can be installed indoor and outdoor
- The product is non-explosion-proof production, and the installation must be avoided being in flammable or explosive environment etc
- The actuator should be in a protection box in the environment of long-term with the splash of rain, material, and direct sunlight
- Please reserve space for controller, manual operation
- The surrounding environment temperature should be in -30℃~+60℃

Temperature of working medium

- When matching with the valve, the actuator body's temperature will a bit rise if the medium temperature heat transfer
- If the temperature of medium is high, the bracket has the function of reducing heat conduction
- Please choose the appropriate bracket according to the working temperature of the medium

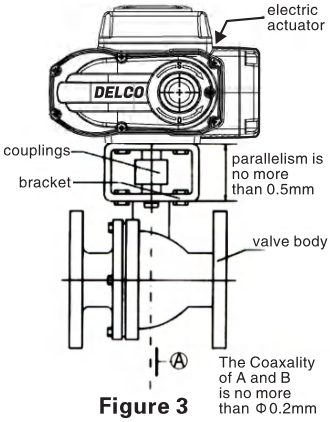

Figure 3

Installed on the valve body (Figure 3)

- Manual operate the actuator to drive the valve, Please confirm it does not have abnormal situation, Ture the make valve in fully closed position
- Assemble the bracket to the valve body
  Set one end of couplings on valve spindle
- Turn the electric actuator to full closing position, and insert output-input shaft into the square holes of couplings
- Set the screw between the electric actuator and bracket
- Turn actuator by hand shank, confirm that it moves translation,no eccentrc.no skew. and no overrun

Cable installation (Figure 4)

- Install wire tubes as shown in Figure 4
- The outside diameter of wire tubes should be Φ 9-Φ 11
- Take measures to proof water
- To prevent actuator from flowing into wire tubes water,the actuation position should higher than wire tubes position
- When installing wire, the outside diameter of wire should be Φ 9-Φ 11
- As figure 5,in case the water flow into actuator interior from line locking, all wire that are not allowed to be used
- The signal wire should be shielded wire, don't parallel it to power wire

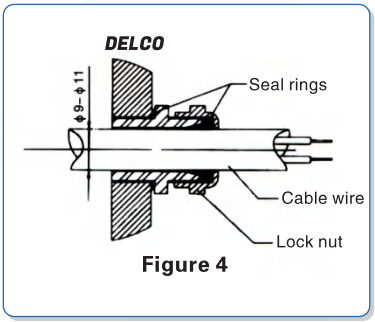

Figure 4

Special tips (Figure 5)

- Caution: Can't connect one actuator parallel with other ones, in other words, Can't use the same controller contact point to control more than one actuator, otherwise it will cause out of control, motor overheating,product damage, shorter seryice life
- If the actuator is installed outdoor, we suggest equipping other protective cover to proof water, stabilize mechanical property.make a longer service life

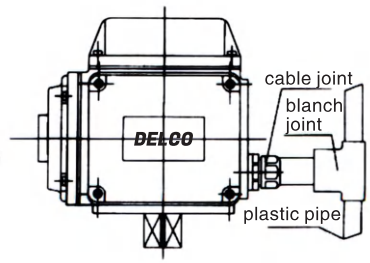

Figure 5

Power voltage 220VAC+10% 50 HZ/60HZ

Guard line options for witch of cuttingoff winding

Ltem	Guard line	W/F rnotor power
02、03、05	3A	10
10、16	5A	25、30
30、60	7A	40、90
125、250、400	10A	100、120、140

Performance Parameter

Ztype bracket and couplings (match with 02,03,05)

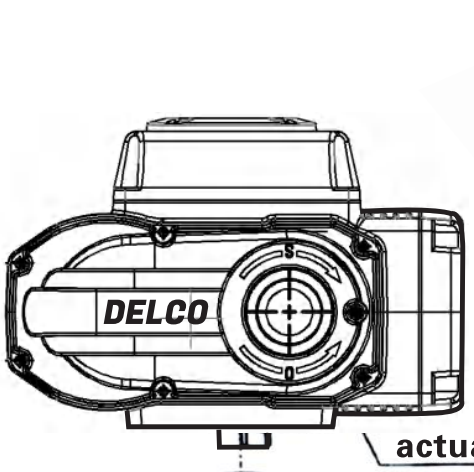

actuator

couplings

bracket

valve body

Installation diagram

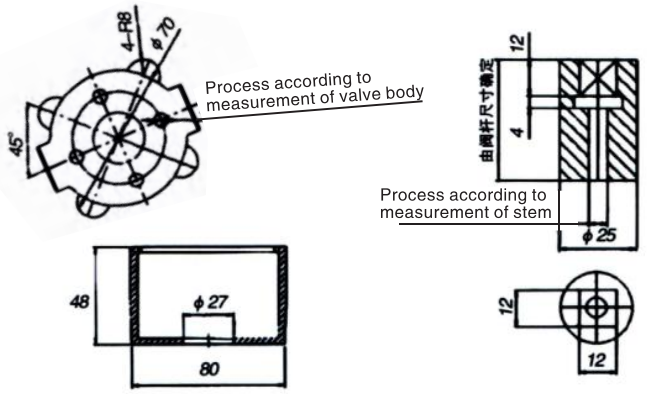

● S type bracket and couplings (match with 10, 16)

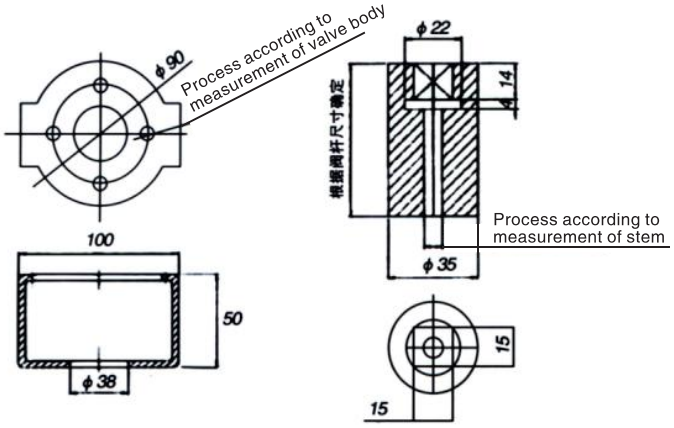

M type bracket and couplings
(match with 30、60、125、250、400)

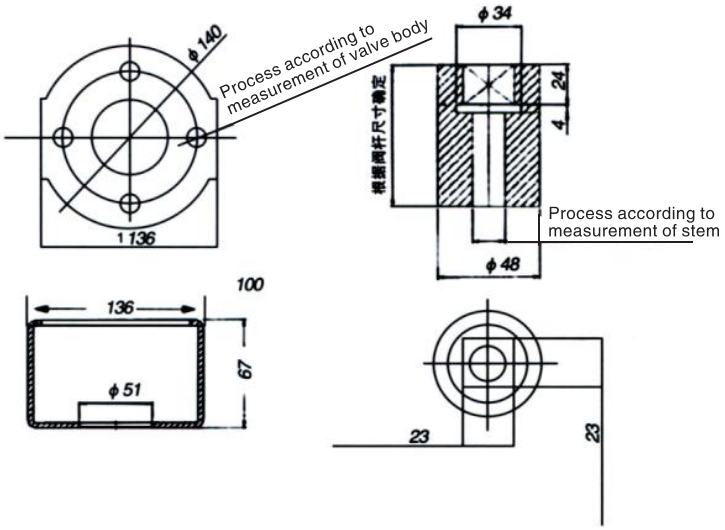

Debug Project

Adjustment of limit position switch (Figure 6)

- Turn the valve to full opening position by hand
- Loosen the screw of travel block and turn the block to drive the travel switch, then fine-tuning sensitive switch until hearing “click”,after that, set screw
- The way of adjustment full opening position is the same as above

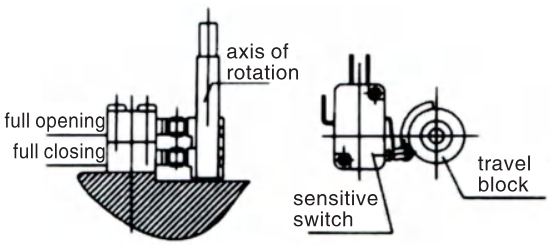

(figure 6)

Adjustment of middle position switch (Figure 7)

- Use hand shank to drive the valve to the position it need
- Loosen the screw of travel block and turn the travel block to drive sensitive switch, then set screw
- These two neutral position switches’ position could be adjusted according to need

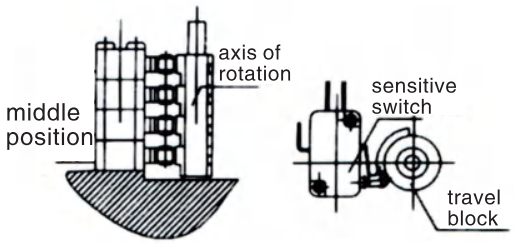

figure 7

Adjustment of potentiometer (Figure 8)

- Use hand shank to drive actuator to neutral position, and turn the pointer point to 50% scale line
- Use multimeter to test resistance of first and third port of potentiometer (resistance between the first port and third port in potentiometer),and mark R(potentiometer default is 1KΩ +15% if no special request)
- Separate potentiometer gear from the opening gear by suitable external force on potentiometer fixing plate
- Put one probe of multimeter to one potentiometer terminal, the other probe to another terminal, then rotate potentiometer gear and see number in multimeterWhen the resistance value is equivalent to R/2 +2Ω, stop rotating, after that,mesh these two gears.

Adjustment of mechanical limit location block (Figure 9)

- Use hand shank to drive valve to full opening position and operate the switch(sensitive switch makes crack sound when it is running)
- Loosen the nut and turn the adjusting screw to touch the mechanical limit location block, then turn the adjusting screw a half turn back, set nut.
- Adjusting the full opening position by the same way as above

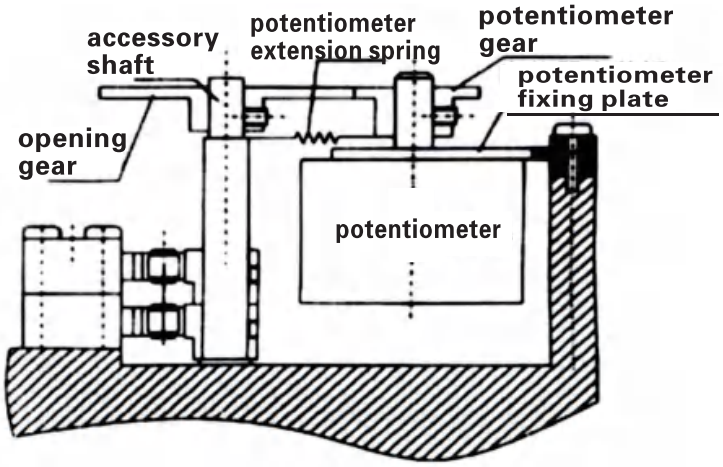

figure 8

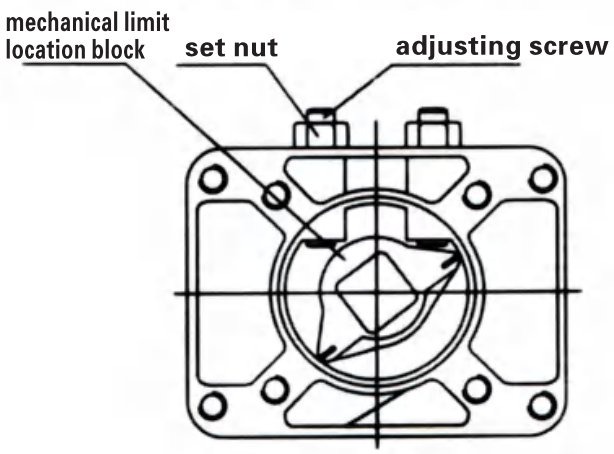

figure 9

Application and Maintenance

All products are fully debugged before they go out, if they don't meet your needs because of the valve, shaft coupling in actual installation. Please resume debugging according to following steps

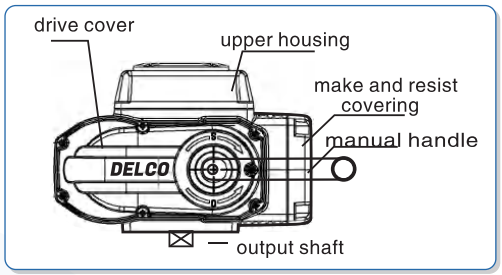

- Fix the actuator assembly to the valve(See installation project)
- Discharge the upper housing of actuator and debug as following steps according to the actual state of valve
  (1)Adjustment of limit position switch (see debugging project)
  (2)Adiustment of neural position switch (see debugging project
  (3)Adjustment of Regulating motor-driven actuator
  (Only for E style,see debugging project)
  Adiustment of mechanical limited location block(see debugging project)
- The manual test run
  (1)Take off the rubber cap of manual handle hole; inset the hand shank into hole and rotate it clockwise to decreased valve opening
  (2)Check whether the limit switch is running or not when the valve is in full closing position(sensitive switch making crack sound when it is running), then turn the adjusting screw a half turn to check if the screw could touch the mechanical limited location block
  (3)Turn hand shank anticlockwise to increase valve opening, check the situation of limit switch and mechanical limit location block the same method, make trial run to see whether they are all righi
- The electric test run
  (1)Take off make and resist covering, and wiring correctly according to circuit diagram
  (2)Make electric turned base on clockwise and anticlockwise separately and see whether actuator and valve are working correctly.) The direction of shut point (clockwise) show close, the direction of open point (anticlockwise) show open

Maintenance and service

- It don't need to put in oil because the molybdenum grease we put are long life and high withstand voltage
- Please take periodical inspection to actuator if you don't use frequently

Trouble and troubleshooting

Fault phenomenon	Reason	Solution
Motor doesnot start	Lacking connection to power supply	Connect the actuator to power supply
	Break line, wire joint out of port	Repair break line,connect port correctly and reinforce port
	Supply voltage is wrong or below level	Check the voltage is correct or wrong
	Overheat protector quick start (if ambient temperature is too high, if the valve is locked)	Temperatures,checking whether the opening and closing of the valve are work correctly
	Limit switch dysfunction	Replace switch
	Capacitance doesn't start or running	Replace capacitance
Opening and closing indicator light does not light	Indicator light is bad	Replace light
	Limit switch dysfunction	Replace switch
	Adjusting of block dysfunction	Readjustment
Opening degree self-change constantly	Signal source has interference signal	Check input signal
	Voltage divider generated interference	Replace potentiometer
	Voltage divider gear or opening gearlooseness	Check whether the screw of gears are tightening up

Adjustable Test

DATA DISPLAY	1	LED digital display window	The actual opening value of the valve, the set opening value of the valve, thetemperature in the positioner shell and the set parameters are displayed through key switching		
STATUS INDICATION	2	OPEN	Actuator on operation indication	1:ON	0:STOP
	3	SHUT	Actuator off operation indication	1:CLOSING	0:STOP
	4	RVSA/DRTA	IForward /reverse action mode	1:REACTION	0:POSITIVE ACTION
	5	OPEN	Input signal interruption -on action	1:REVERSE ACTION MODE	0:INVALID
	6	STOP	Signal interrupt - stop	1:REVERSE ACTION MODE	0:INVALID
	7	SHUT	Input signal interrupt - off action	1:REVERSE ACTION MODE	0:INVALID
	8	AUTO	Automatic working state	1:AUTO STATE	0:INVALID
	9	MANU	Manual working state	1:MANUAL STATUS	0:INVALID
Note: for status indication, when 1-on, 0-off, 5, 6 and 7 indicators are not on, signal interruption detection will not be carried out					
PRESS KEY	10	AM	Touch: automatic/manual state switchingv Long press: enter the menu setting state Setting status: confirm Go to the next function		
	11	▲	Automatic status: valve position /input display switching Manual status: on action Setting status: increase value		
	12	▼	Automatic status: valve position /input display bswitching Manual status: closing action Setting status: decrease value		

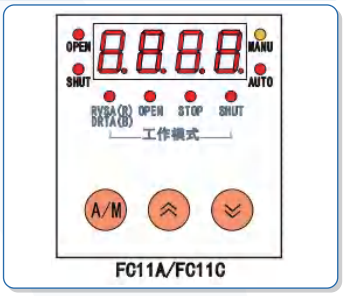

FC11A/FC11C

EXPLAIN

- FC11 A /C series products, also commonly known as large and small control modules;
- Generally, it only includes basic control functions and cannot add other special functions;
- Optional power supply voltage:AC220V/AC110V/AC24V/AC380V.DC24V/DC12V
- Optional input and output signals: 4-02ma/0-10V/1-5V, switching value signal (or others);
- Standard motor and potentiometer interface: 6pin /7pin 2.54mm row plug;
- If more functional products are needed, fc1ir and fc13a /C series products can be selected.

Operation method ofintelligent module

- A、 Quick use method:

Step 1: Connect the actuator, connect the power line corresponding to the module (the positive and negative poles of DC power supply must be connected correspondingly, otherwise the module will be burmed)signal input line and signal output line (not connected when not in use);

Step 2: When the module is powered on, press the A / M key to switch to the manual mode, the "manu" light flashes, press the a ▲key to check whether the actuator operates in the open direction, press the▼ key to check whether the actuator operates in the closed direction, and enter the next step after confirming that the direction is normal;

Step 3: Automatic calibration of valve position: press the A / M key and ▼ key at the same time, and a circular dotted line will appear around the module screen. At this time, the module enters the automatic calibration state. When 100 is displayed after the module calibration is completed, press the A / M key to confirm; lf E2 alarm occurs during calilbration, it is necessary to enter manual mode for calibration;

Step 4: If the adjustment is accidentally wrong or disordered during debugging, long press the A / M key to enter the menu bar, press the A/ M key to U5 setting item, press the ▲key and ▼ key to make the password 3888, then press the A / M key to confirm that the factory setting is restored, and then re debug;

Step 5: If the module is not operated for a long time under the automatic state, it will enter the screen saver st-ate. To release the screen saver state, first press the A / M key, then press the ▲key and ▼ key tomake the password 6030, and then press the A / M key to release the screen saver state; The manual mode will not enter the screen saver state;

Step 6: If you need to adjust other functions, first long press the A / M key to enter the menu bar, and then adiust the corresponding setting parameters as needed.

Adjustable Test

- B:Basic setting of menu bar : (press and hold the A / M key for more than 3 seconds to enter the menu; press the A / M key to confirm, and press the a /▼ key to change the data)

MENU	SHOW	DEFINITION	FACTORY VALUE
U0	X.X	Electronic brake 0.X:Nothing 1 .X: Valid X.0 standard: the effective input signal is 4-20mA hardware configuration. X.1 switch: the effective input signal is the hardware configuration of the switch signal. X.2 communication: the effective input signal is 485 bus signal with priority This configuration requires factory hardware support. It is usually set by the manufacturer, and users should not change it easily	1.0
U1	X.X	Positive reaction 1.X:Reaction 0.X:Positive action In reverse action mode, when 4mA signal is input, control the valve to be fully closed In positive action mode, when 4mA signal is input, the control valve is fully opened Interrupt signal mode X.0: Ignore (no alarm) X.1:On X.2: Stop X.3: Off When the input signal is disconnected, the actuator performs the above setting actions respectively	1.2
U2	XX.X	Lower limit value of valve position, setting range: 0.0 ~ less than u3	0.0
U3	XXX.X	Upper limit value of valve position, setting range: greater than U2~100.0	100.0
U4	X.X	Positioning accuracy, i.e. positioning error of x.x/100, setting range: 0.1~9.9. The accuracy value is too small, and the actuator is easy to vibrate;Too large, affecting the control accuracy.	0.5/1.0
U5	XXXX	U5 is a multi-function menu. Different characters enter the corresponding special functions U5 = "_ OH _": manually calibrate the "fully closed" and "fully open" positions of the valve; U5 = "_ OA _": automatically calibrate the "fully closed" and "fully open" positio -ns of the valve; U5 = "288": calibrate the "fully closed" and "fully open" points of the input signal; U5 = "588": calibrate the "fully closed" and "fully open" points of the output signal; U5 = "1888": set current temperature / locked rotor time / valve address number; J5="3888": restore factory settings; U5 = "other numbers": save the current setting;	-oh-

Manual calibration of threshold position signal: (calibrate angle potentiometer)

Press and hold the A / M key to enter the setting menu. When U5 = - CH -, press the AM key to confirm:

MENU	SHOW	DEFINITION	NUMERICAL RANGE
U6	XXX	Manual calibration of actuator fully closed (zero position): Press the▼key to adjust the valve position until it is fully closed press the ▲key to return to a point (return the limit switch to the closed state), and then press the A /M key to confirm.	50-100/ 200~400
U7	XXXX	Manual calibration of actuator fully open (full position): Press the ▼ key to adjust the valve position until it is fully open, press the ▲key to retur to a point (return the limit switch to the closed state), and then press the A /M key to confirm.	800-1000/ 3200~4000

In U6 and U7, if the ▲/▼ key is not moved, the set valve position data will not be changed;

Automatic calibration of valve position signal:

In addition to manually calibrating U6 (valve fully closed position) and U7 (valve fully open position) according to "Table 1", the following methods can also be used for automatic calibration of valve position;
After power on, press and hold the AM key, and then press the ▼ key. Namely: press am + ▼at the same time.
When the cycle flag appears, start to automatically calibrate the off position and on position.
After the calibration is successful, the data jump displays 100.0, and press the AM key to confirm.
If E2 appears, you need to enter the menu to manually calibrate and check whether the data range is normal;

Troubleshooting of Intelligent Regulation

Some common fault codes in the use of intelligent modules. The fault description,causes and solutions are as follows:

FAULT ALARM DESCRIPTION	Reason	Solution
E0 actuator tempe-rature high	The internal temperature of the product exceeds the alarm value	Reduce the ambient temperature; Reduce the openingand closing action frequency; Replace the first-classpower products;
E1 input signal interruption	The input signal is not connected well, and the signal is deliberately interrupted	Check the setting of line and equipment control end; Interrupt signal setting: ignore;
E2 valve position data is invalid	The data of closing and opening valve ends exceeds the normal range	Calibrate the valve position and reserve the margin of 0 at both ends; Poor installation angle of potentiometer?
E3 valve position data is reversed	The valve position data runs counter to the running direction	Check whether the head and end of potentiometer are connected reversely; Potentiometer goes to blank area short circuit in the middle?
E4 locked rotor in closing direction	During off operation, the designated position of the signal cannot be reached	Enter the manual mode and check whether it can be controlled normally and whether it is difficult to switch:vStuck valve?
E5 locked rotor in open direction	TWhen the sianal fails to reach the specified position	Enter the manual mode and check whether it can be controlled normally and whether it is difficult to switch:vStuck valve?
E6 execute ESO valve position	Signal action of external ESD terminal	Special operation of this equipment, interrupt automatic control, execute SD, set valve position and alarm;

- E1 (signal interruption): when the 4-20mA input signal is not connected or short circuited, the product will report E1, and control the actuator to operate according to the signal interruption function set by the module.
  E1 (signal interruption) is not necessarily a line fault, but may also be used for special function control processing according to human requirements.

- E2 (valve position data acquisition failure): E2 is to ensure the reliable and effective operation of the product and self verify the set valve position data. Generally, U6 = 300AD value (80ad value of fc11ac series, U7 = 3600ad value (p20ad value of fc1 1ac series, the working effect of the product is the best. Not only the effective data range is large, but also the overshoot allowance is sufficient, When U6<20,U6>3000,ut>4070,U7<1000,u7-u6)<153 (fci1m/C series: U20,U6>800,u>1000.U7<100, au7-u6)<153), it indicates that the collected valve position data are unqualified and very dangerous, Therefore, report E2 to remind the user: check whether the potentiometer wiring is loose, whether the potentiometer gear clamping teeth are misaligned, and whether the potentiometer gear ratio is designed incorrectly.

- E3 (reverse valve operation): generally, we stipulate that during manual operation, press the▼key to open the valve - the data increases, and press the ey to close the valve - the data decreases. When this rule is violated: the motor on and off drive lines are connected reversely;Or the RO and RS lines of potentiometer are connected reversely; Or the potentiometer wire is loose, causing the data to go wrong.

- E4 and E5 (locked rotor in the closing and opening directions of the valve): when the automatic /remote / 485 / infrared switch is in place, when the data stops for 5 seconds in the closing and opening directions and does not run to the input signal / setting position, E4 / E5 alarm will be given and three advance and retreat processes will be carried out. if the position of locked rotor is exceeded during the three advance and retreat of the valve, E4 / E5 alarm will be automatically released. If it still cannot get stuck after 3 times of treatment, the operation in this direction will stop.When the reverse direction sianal changes, control the motor to run in the reverse direction. If the reverse direction operation is successful, the alarm will be released. When the operation in both positive and negative directions is unsuccessful, report E4 / E5 and never move.
  In case of locked rotor, first check the closing and opening positions, Whether the limit switch acts and causes locked rotor (when calibrating U6 and U7, it is necessary to go back to the middle, reset the limit switch, and then check whether U6 and U7 are fully closed - whether the data meets the specifications in the process of fully opening. In the process of data acquisition, the data should be continuously increased and decreased without abnormal occurrence (when the potentiometer quality is poor, the data jump is severe, and even a certain section of data is 0 or the maximum value).

Intelligent Module Software Flow Chart

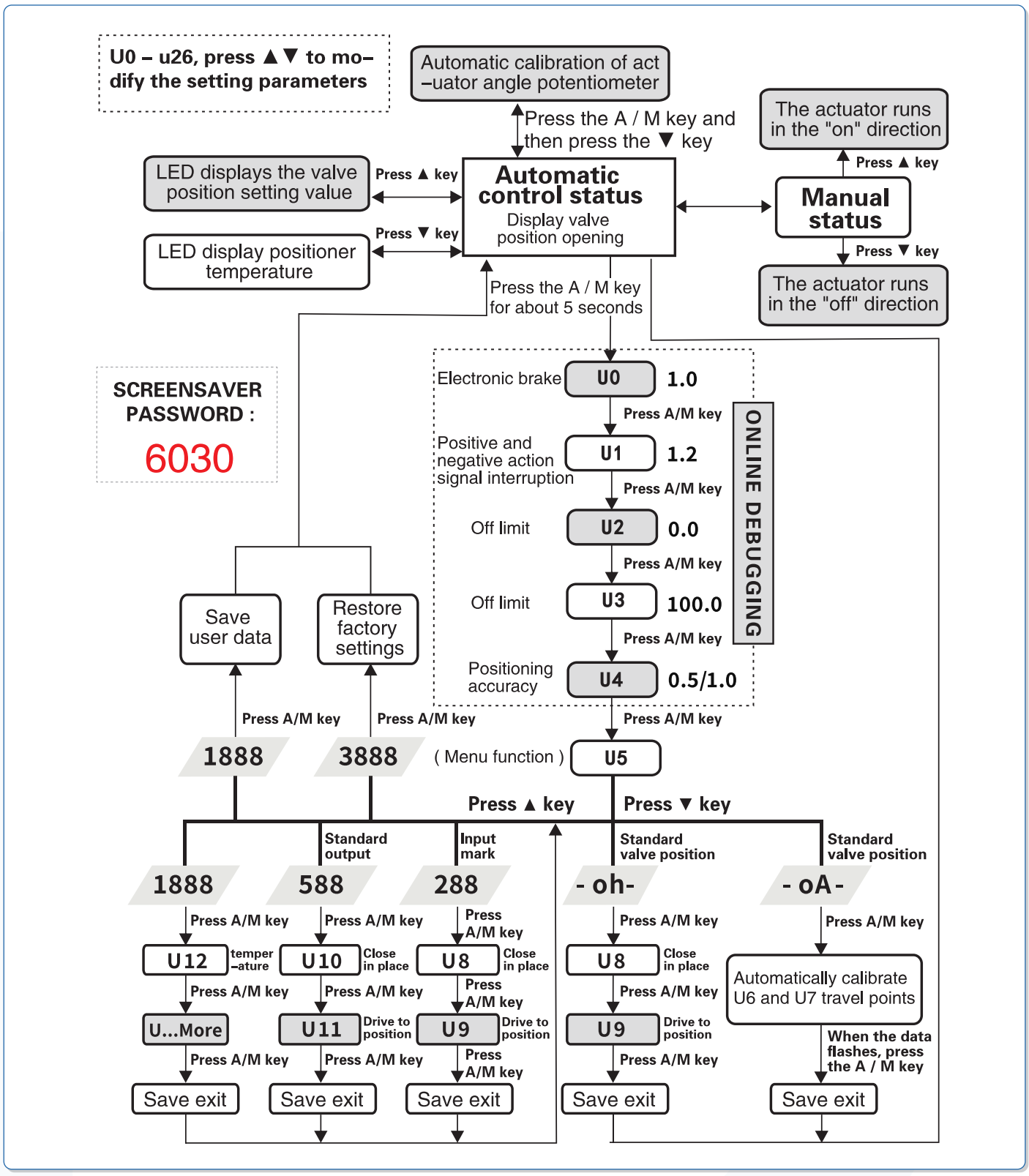

Special caution

Each parameters of regulating motor-driven actuator have already been calibrated before leave factory, Don't change unless it need, If need to change,please read it carefully before changing.

DELCO®
VALVE

GLOBAL TRUSTED MANUFACTURER OF AUTOMATED CONTROL VALVE

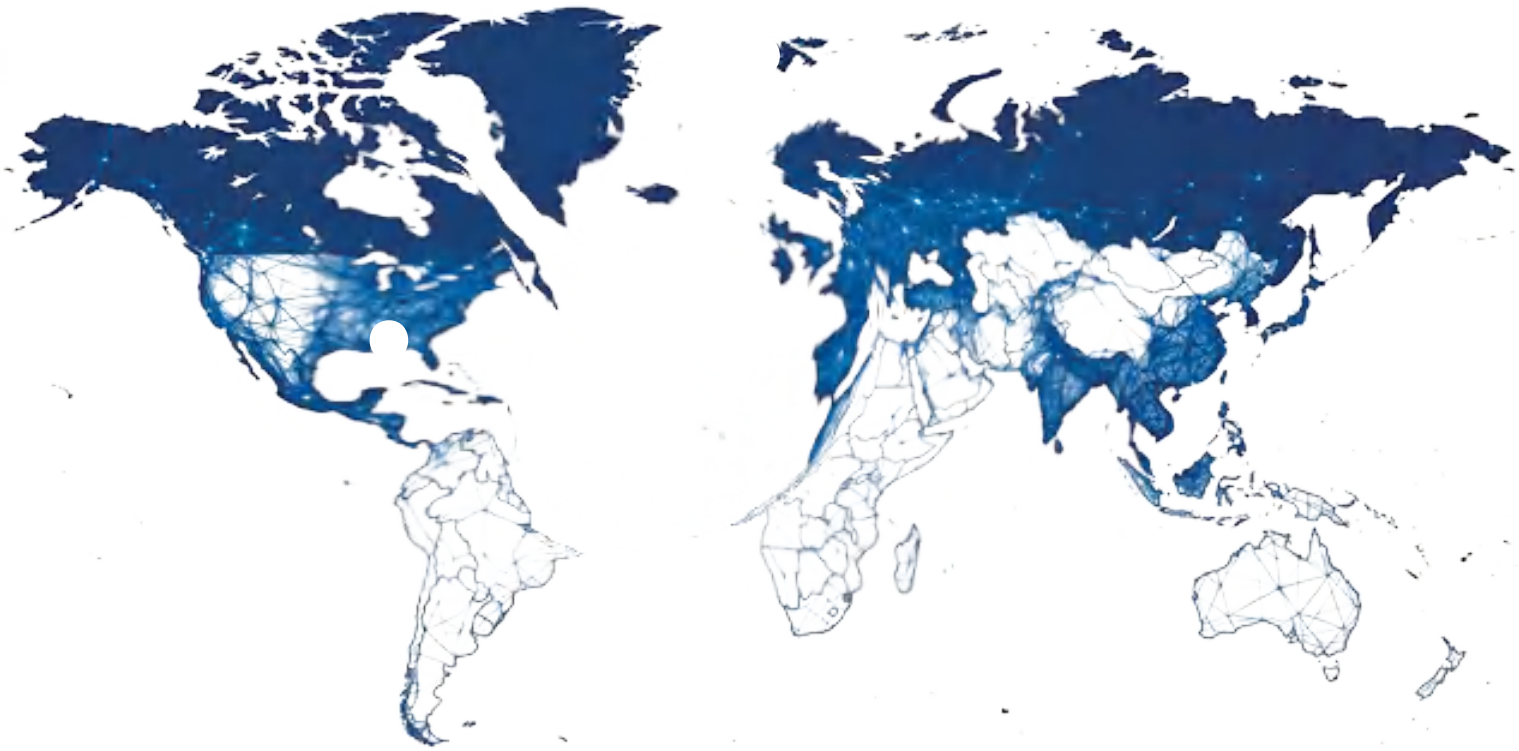

Seeking For Global Distributors

DELCO VALVE CO.LTD

Building 8A#, Tiansheng Industrial Park,
Wanjiang Street, Dongguan,
China

DELCO VALVE LLC

1500 N GRANT ST
STE R DENVER CO 80203
US

sales@delcofluid.com

+86-159 8960 2972 | 0769-2227-9082

www.delcofluid.com | www.delcovalves.com | www.valve-delco.com