2W41 Series Underwater Solenoid Valve

INSTRUCTION MANUAL

DELCO

Specialized Control Valve Manufacturer

ISO RoHs CE FDA

Characteristic	Use waterproof coil, dedicated to fountain.	
Medium	Water	
Temperature	N-NBR:-5℃~80℃ E-EPDM:-5℃~100℃ V-VITON:-10℃~120℃	
Pressure	0~1.0MPa	
Port Size	Thread:3/8"~2" Flange: 1/2 "~4"	
Port Thread	BSPP/NPT/BSPP,NPT,FLANGE	
Orifice(mm)	12, 15, 20, 25, 32, 40, 50	
Voltage	DC-12V,24V AC-24V,120V,240V/60Hz,110V,220V/50Hz	
Tolerance	±10%	
Coils	F14B,26VA(AC),13W(DC),IP68,100%ED F24B,28VA(AC),15W(DC),IP68,100%ED	
Material	Body	SUS,Brass, PVC
	Seal	NBR,EPDM,VITON
	Armature Tube	Stainless Steel 304
	Plunger	Stainless Steel 430F
	Stop	SS 430F
	Springs	SS 304
	Shading Rings	Copper

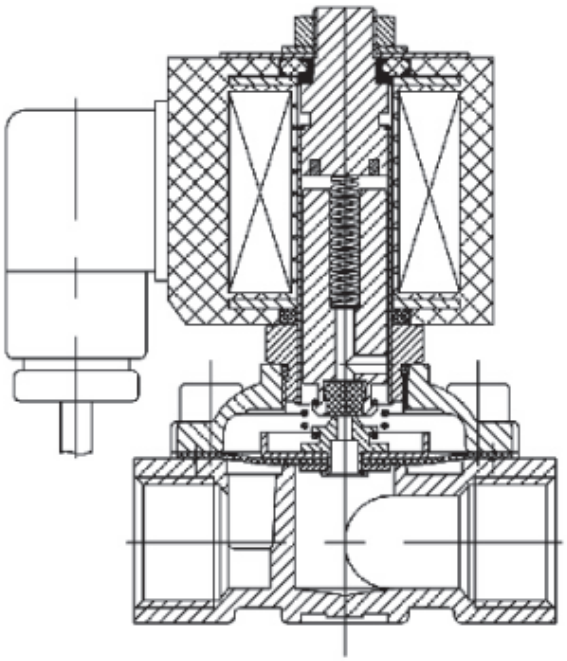

Determine Valve Body Code

Type	Orifice mm	Port Thread	Body	Sealing	Coils	Voltage
2W41	12、15、20、25、35、40、50、	G-G/BSP G/BSP N-NPT thread NP F-Flange	B-Brass S-Stainless Steel P-PVC	N-NBR E-EPDM V-VITON	F14B F24B	1、AC220V 2、DC24V 3、AC110V 4、DC12V 5、AC24V 6、AC12V

2W41 Series Normally Closed, F14B /F24B Coil

Size	Port Size	Orifice/MM	Cv	Min Pressure	Max Presuure		Sealing Material	Body Material	Coils
					AC	DC			
2W41 15 XXX	1/2"	15	4.5	0.0MPa	0.5MPa	0.5MPa	NVR EPDM VITON	Brass Stainless Steel PVC	F14B
2W41 20 XXX	3/4"	20	9.3	0.0MPa	0.5MPa	0.5MPa			F14B
2W41 25 XXX	1"	25	12	0.0MPa	0.5MPa	0.5MPa			F14B
2W41 32 XXX	1 1/4"	32	22	0.0MPa	0.5MPa	0.5MPa			F14B
2W41 40 XXX	1 1/2"	40	30	0.0MPa	0.5MPa	0.5MPa			F14B
2W41 50 XXX	2"	50	48	0.0MPa	0.5MPa	0.5MPa			F14B
2W41 65 XXX	F2 1/2"	65	68	0.0MPa	0.5MPa	0.5MPa			F14B
2W41 80 XXX	F3"	80	100	0.0MPa	0.5MPa	0.5MPa			F14B
2W41 100 XXX	F4"	100	175	0.0MPa	0.5MPa	0.5MPa			F14B

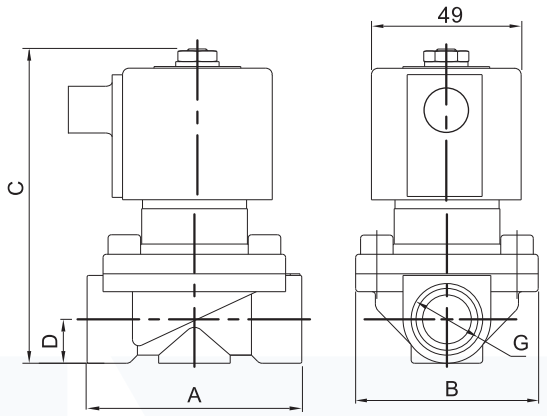

DN10-DN25

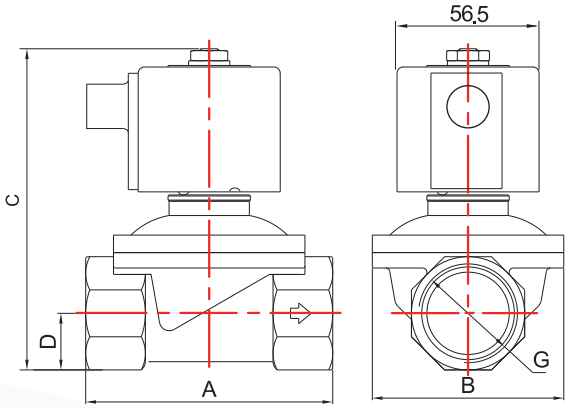

DN32-DN50

Size Drawing For 2W41 Series Solenoid Valve Thread Type

Size		2W41-10	2W41-15	2W41-20	2W41-25	2W41-32	2W41-40	2W41-50
A		68	68	68	97	115	122	166
B		56	56	56	76	86	93	118.5
C	NO	100	122	127	133	153	160	180
	NC	90	112	117	123	153	160	180
D		13.5	13.5	16.5	21	24	28	36

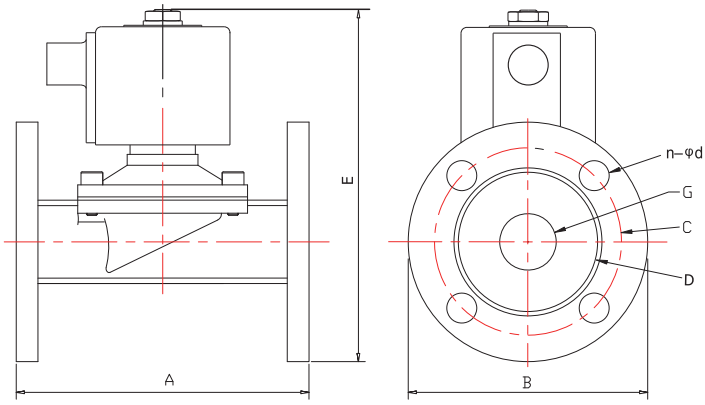

Size Drawing For 2W31-F Series Solenoid Valve Flange Type

SIZE	A	B	C	D	n-Φd	E	
						NO	NC
2W41-F-15	101	Φ90	Φ65	Φ40	4-Φ14	145	135
2W41-F-20	103	Φ100	Φ75	Φ48	4-Φ14	157	147
2W41-F-25	133	Φ110	Φ85	Φ62	4-Φ14	162	152
2W41-F-32	142.5	Φ132	Φ100	Φ66	4-Φ18	185	185
2W41-F-40	152	Φ142	Φ110	Φ76	4-Φ18	200	200
2W41-F-50	178	Φ155	Φ125	Φ96	4-Φ18	212	212

Determine Valve Body Code

S	2	1	B	1
Model Number	**NO**	**Wiring Form**	**Rank**	**Input Voltage**
S-Plastic Coil Y-Waterproof Coil F-Waterproof Coil L-Self Retaining Coils Ex- Explosion-proof coils	1 2 3 4 5 6 7 8 9 A D0 C	1-Connection box 2-45cm lead 3-1/2" conduit 4-1m long lead	B-B grade (-20~130℃) F-F grade(-20~155℃) H-H grade(-20~180℃)	1-AC220V 2-DC24V 3-AC110V 4-DC12V 5-AC24V 6- DC6V 7-AC380V

DIN 43650B

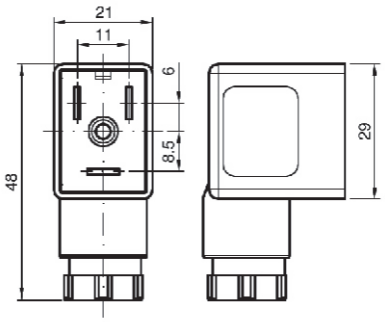

DIN 43650A

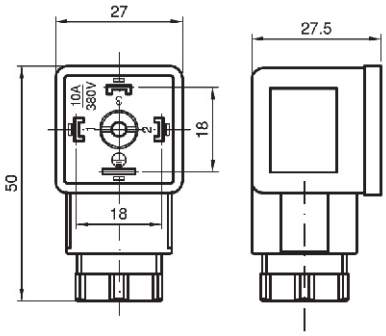

S11B

Voltage
AC24 - 240V 50Hz / 60Hz
DC12 - 48V

power
22VA 13W

Protection level
H

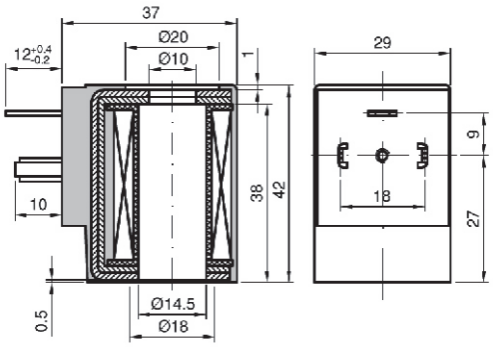

L11B

Voltage
DC4.5 - 24V

power
14W

Protection level
H

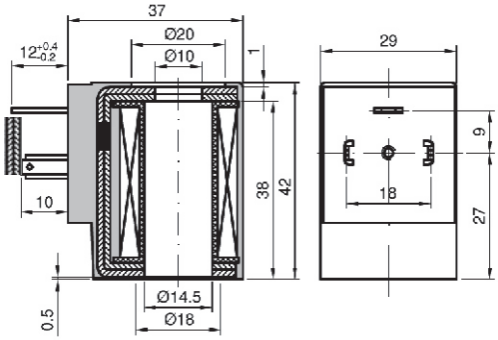

0543

Voltage
AC24 - 240V 50HZ / 60HZ
DC12 - 48V

power
22VA 13W

Protection level
H

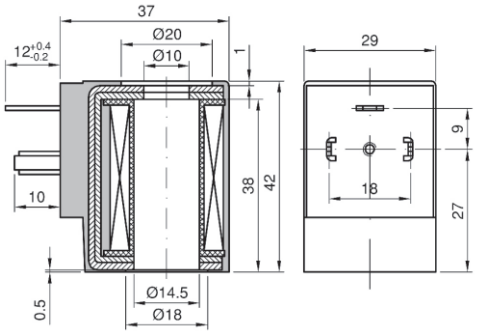

S21B

Voltage
AC24 - 240V 50Hz / 60Hz
DC12 - 48V

power
24VA 18W

Protection level
H

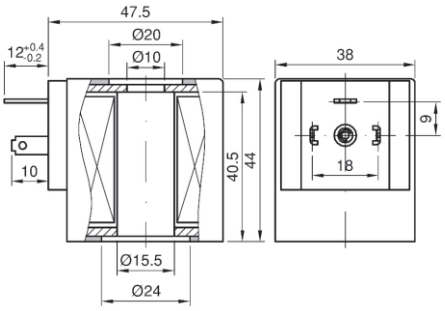

S22B

Voltage
AC24 - 240V 50Hz / 60Hz
DC12 - 48V

power
30VA 18W

Protection level
H

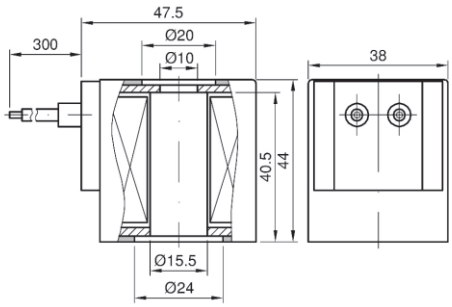

S41B

Voltage
AC24 - 240V 50Hz / 60Hz
DC12 - 48V

power
18VA 11W

Protection level
H

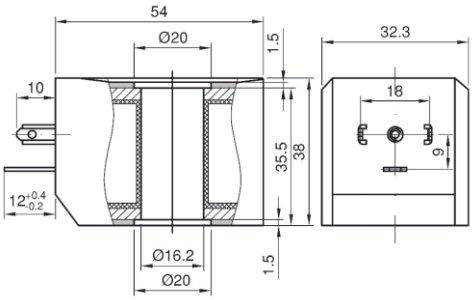

S51B

Voltage
AC24 - 240V 50Hz / 60Hz
DC12 - 48V

power
30VA 24W

Protection level
H

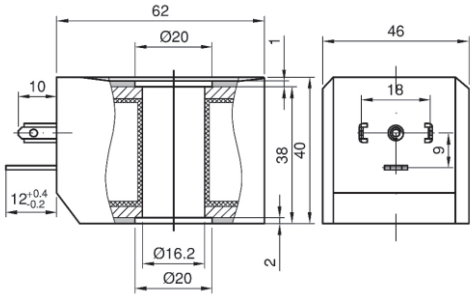

S61B

Voltage
AC24 - 240V 50Hz / 60Hz
DC12 - 48V

power
28VA 36W

Protection level
H

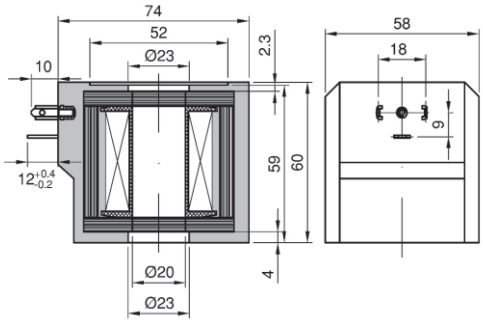

S91B

Voltage
AC24 - 240V 50Hz / 60Hz
DC12 - 48V

power
22VA 17W

Protection level
H

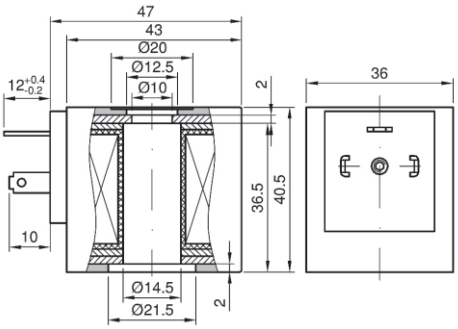

S92B

Voltage
AC24 - 240V 50Hz / 60Hz
DC12 - 48V

power
22VA 17W

Protection level
H

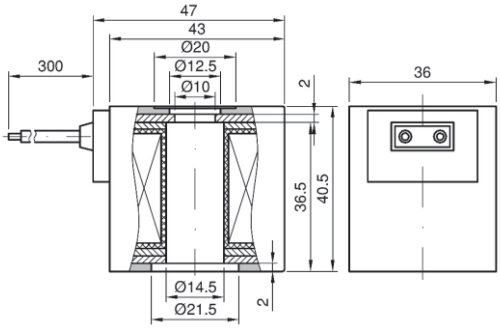

L21B

Voltage
DC4.5 - 24V

power
10W

Protection level
H

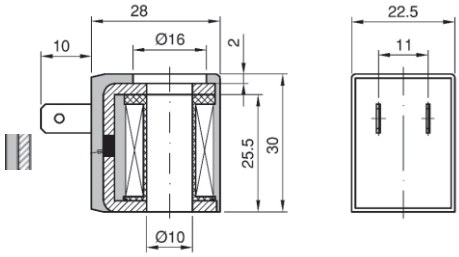

S81B

Voltage
AC24 - 240V 50Hz / 60Hz
DC12 - 48V

power
5. 5VA 4. 8W

Protection level
H

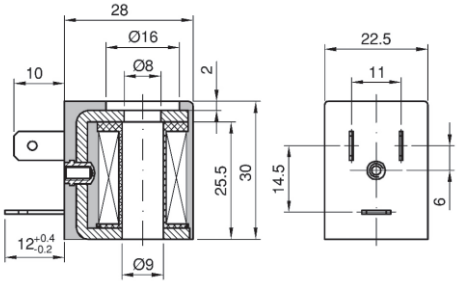

SA12B

Voltage
AC24 - 240V 50Hz / 60Hz
DC12 - 48V

power
6. 5W

Protection level
H

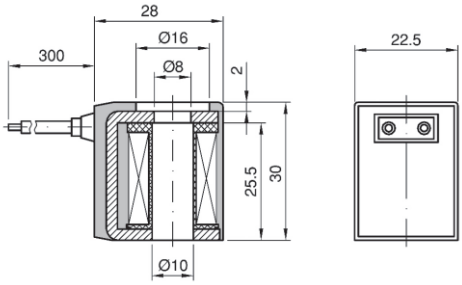

SA11B

Voltage
AC24 - 240V 50Hz / 60Hz
DC12 - 48V

power
6. 5W

Protection level
H

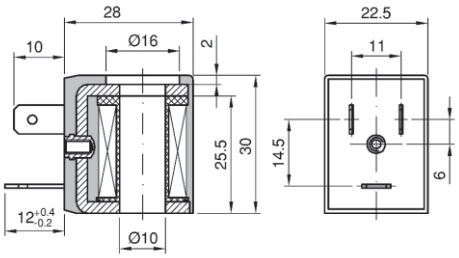

SD01B

Voltage
AC24 - 240V 50Hz / 60Hz
DC12 - 48V

power
16VA 13W

Protection level
H

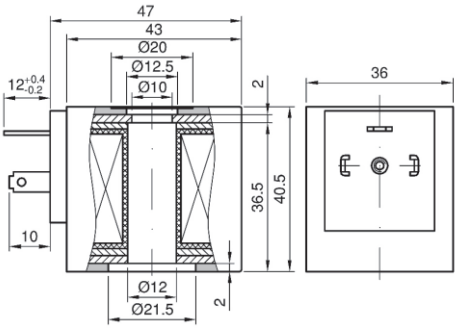

SA41B

Voltage
AC24 - 240V 50Hz / 60Hz
DC12 - 48V

power
5W

Protection level
F

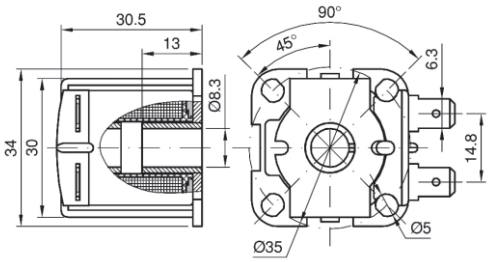

EX1620

Voltage
AC220V 50Hz
DC24V

power
20VA 16W

Protection level
H

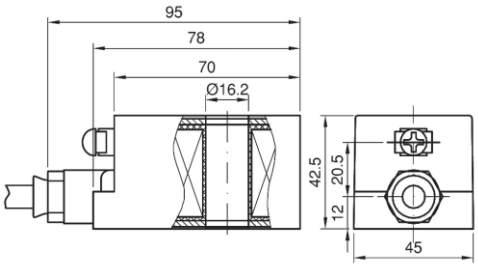

AB12B

Voltage
AC24 - 240V 50Hz / 60Hz
DC12 - 48V

power
5W

Protection level
F

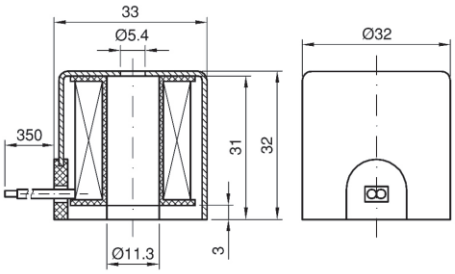

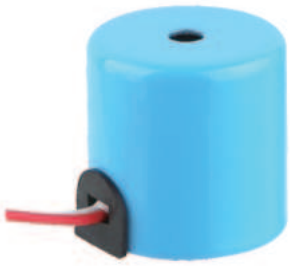

Y32B

Voltage
AC24 - 240V 50Hz / 60Hz
DC12 - 48V

power
40VA 18W

Protection level
H

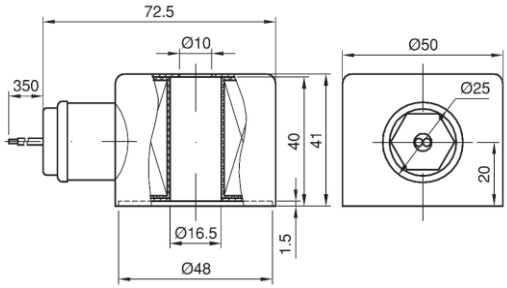

Y42B

Voltage
AC24 - 240V 50Hz / 60Hz
DC12 - 48V

power
50VA 20W

Protection level
H

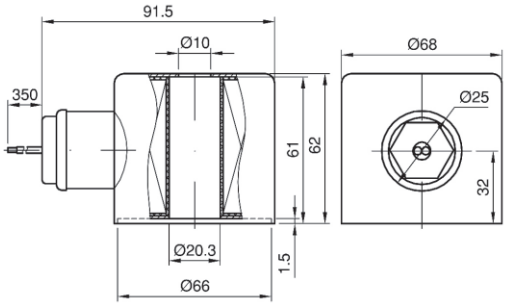

Y21B

Voltage
AC24 - 240V 50Hz / 60Hz
DC12 - 48V

power
18VA 16W

Protection level
H

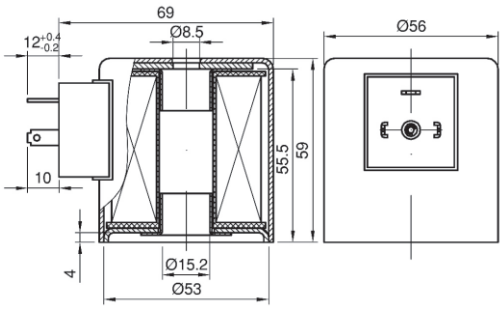

Y51B

Voltage
AC24 - 240V 50Hz / 60Hz
DC12 - 48V

power
70VA 50W

Protection level
H

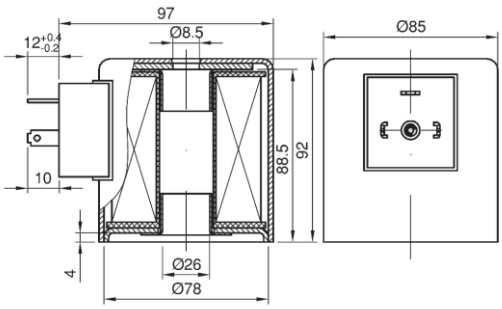

Y82B

Voltage
AC24 - 240V 50Hz / 60Hz
DC12 - 48V

power
6VA 5W

Protection level
H

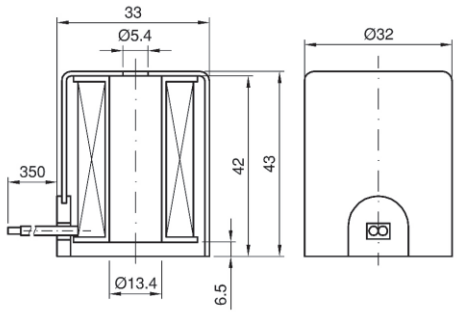

Y91B

Voltage
AC24 - 240V 50Hz / 60Hz
DC12 - 48V

power
20VA 28W

Protection level
H

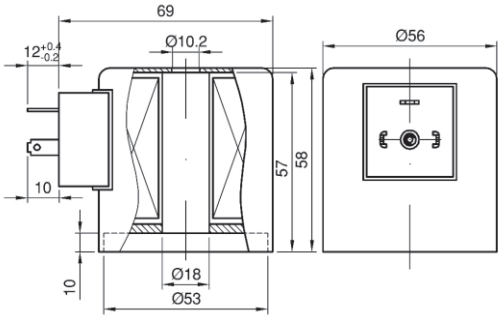

F14

Voltage
AC24 - 240V 50Hz / 60Hz
DC12 - 48V

power
26VA 13W

Protection level
H

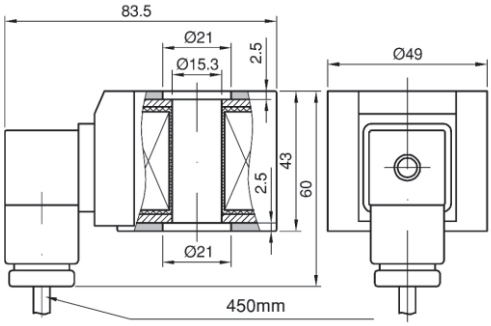

F24

Voltage
AC24 - 240V 50Hz / 60Hz
DC12 - 48V

power
28VA 15W

Protection level
H

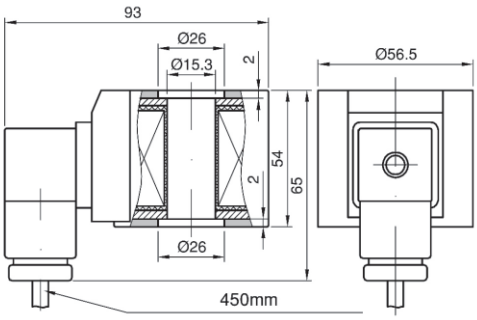

Valve body,seal material and medium modeling table

Medium \ Material	Brass	Cast Iron	Stainless Steel	Plastic	NBR	EPDM	PTFE	Teflon
Air	√	√	√	√	√	√	√	√
Natural Gas	√	√	√		√	√	√	√
Qxygen	√	√	√	√	√	√	√	√
Hydrogen	√		√		√		√	√
City Gas	√		√				√	√
Industrial Gas	√		√		√			√
Nitrogen	√		√				√	√
Refined Oil	√	√	√				√	√
Water	√	√	√	√	√	√	√	√
Steam	√	√	√		x	√	√	√
Drinking Water	√	√	√	√		√		√
Seawater	√		√	√	√	√	√	√
Industrial Water			√				√	√
Gasoline	√	√	√			x	√	√
Kerosene	√	√	√	√	√	x	√	√
Diesel	√	√	√	√	√	x	√	√
Milk	√	√	√	√	√	√	√	√
Liqueur	√	√	√	√	√	√	√	√
Alcohol	√	√	√		√	x		√
Acetylene	√	√	√		√	x	√	√
Ethanol	√	√	√		√	x	√	√
Propanol	√	√	√		√	x	x	√
Ammonia					x			√
Toluene	√	√	√			x	√	√
Xylene	√	√	√			x	√	√
Propane	√	√	√			x	√	√
Methane	√	√	√		√	x	√	√
Sulfur Dioxide	√	√	√				√	√
< 20% Sodium Hydroxide		√	√		√	x		√
< 10% Nitric Acid			√				√	√
< 20% Sulfuric Acid							√	√
< 10% Hydrochloric Acid								√
Acetic Acid	√	√	√		√	x	√	√

Flow Calculation

- **1.Liquid (volume)**

$$Q=14.28Cv\frac{\sqrt{P^1-P^2}}{\sqrt{G}}$$

Note: The influence of viscosity is not considered, when it is less than 20CST, that is, 200mm/s

- **3.Description**

P1: Inlet pressure Kgf/cm²
P2: Outlet pressure Kgf/cm²
P: P1−P2
G: Proportion（Water=1, Air=1）
P4: Flow Coefficient (1Kv=14.28Cv)

- **2.Gas (volume)**

$$Q=198.3CvP_1\frac{1}{\sqrt{G}}\quad (P_2 \le \frac{P_1}{1.89})$$

$$Q=396.6Cv\sqrt{\triangle PP_2}\frac{1}{\sqrt{G}}\quad (P_2 > \frac{P_1}{1.89})$$

Note: Standard atmospheric state : 760mmHg,15.6C
Q:cm/min

Common Unit Of Pressure

1Kgf/cm² =1bar=0.1MPa=100Ka=14.5PSI

AC- Communicate With

DC- Direct Current

Common Seals Material

Used in different places and conditions, some relevant data is for reference only:

1.NBR

Mainly used for diaphragms, O-rings and seals, suitable for most gases, water, gasoline, etc., and the medium temperature can be used at -10℃ to 80℃

2. EPDM

Mainly used in places above the NBR temperature, (such as hot water, low pressure steam) is also suitable for most gases. The medium temperature can be used at -10℃ to 100℃

3. VITON

Mainly used in places where NBR and EPDM cannot be used, and can be used with more gases, water, oil, gasoline, solvents, etc. The medium temperature can be used at -20℃ to 120℃

4.PTFE

It can be applied to almost all fluids. But because of its "cold flow" characteristics. As a dynamic seal, it is prone to leakage especially under gas.

Coil Current Tile Number Statistics				
Coil Model	Product Model	Voltage	Electric Current	Power
S91B	2W31-15	DC12V	1.7A	20W
S91B	2W31-15	DC24V	0.7A	17W
S91B	2W31-15	AC110V	0.2A	12.5W
S91B	2W31-15	AC220V	0.1A	12W
S91B	2W31-15	AC380V		
Y32B	2W-15	DC12V	1.1A	13W
Y32B	2W-15	DC24V	0.75A	18W
Y32B	2W-15	AV110V		
Y32B	2W-15	AC220V	0.18A	20W
Y32B	2W-15	AC380		
Y42B	2W-40	DC12V		
Y42B	2W-40	DC24V	2.7A	64W
Y42B	2W-40	AC110V	0.23A	14W
Y42B	2W-40	AC220V	0.14A	16.8W
Y42B	2W-40	AC380V		

Coil Current Tile Number Statistics				
Coil Model	Product Model	Voltage	Electric Current	Power
S51B	2W21-15	DC12V	2A	24W
S51B	2W21-15	DC24V	0.96A	23W
S51B	2W21-15	AC110V	0.27A	16.8W
S51B	2W21-15	AC220V	0.14A	17.5W
S51B	2W21-15	AC380V		
SD01B	2W21-40	DC12V	2.8A	33.5W
SD01B	2W21-40	DC24V	1.5A	36W
SD01B	2W21-40	AV110V	0.32A	17.3W
SD01B	2W21-40	AC220V	0.13A	14W
SD01B	2W21-40	AC380		
Y92B	US-15	DC12V		
Y92B	US-15	DC24V	2.8A	67W
Y92B	US-15	AC110V	0.5A	16.4W
Y92B	US-15	AC220V	0.23A	16W
Y92B	US-15	AC380V		

Safety instructions Before Starting

1. Check the compatibility of the medium used, temperature and other operating conditions with the materials and specifications of the product. It is the responsibility of the user to select the right product for the application.
2. Solenoid valves can only be used with clean liquids or gases. It is recommended to install a filter before the solenoid valve.
3. Never exceed the limits for pressure, temperature or voltage as indicated on the product and/or in the technical documentation.
4. The temperature of a solenoid valve coil can rise during operation; this is normal. Overheating will cause smoke and a burning smell. In this case, the power supply must immediately be disconnected.

It is recommended to install the solenoid in vertical position with the coil facing upwards. This reduces the probability of the collection of debris in the solenoid valve.

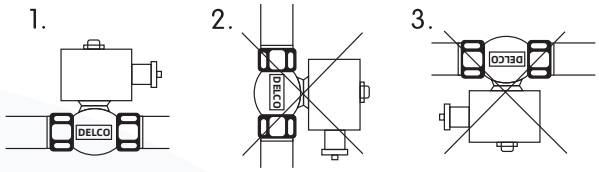

Be aware of the direction of flow of the medium when installing the valve. Solenoid valves with an arrow on the housing mustbe connected in the indicated direction. The pipes on both sides of the valve must be securely fastened. Use a wrench for both valve and pipe while tightening to prevent unnecessary stresses in the system. The solenoid valve must be fixed via the provided connection points. Only exert force at the designated areas on the body such as the hexagon; never to the coil or armature. Avoid vibration in the pipes. Use a suitable sealant for threaded connections of the solenoid valve. Avoid the entry of thread sealing material in the valve, this can lead to malfunctioning of the valve.

Common Faults and inspection , Troubleshooting

Problem	Solution
Valve fails to operate	1. Check electrical supply with voltmeter, Voltage must agree with nameplate rating.
	2.Check coil with ohmmeter for shorted or opened coil.
	3.Make sure that pressure complies with nameplate rating.
The valve is sluggish or inoperative-electricalsupply and pressure check out	1. Disassemble valve; clean out extraneous matter, The plunger must be free to move without binding.
	2. If a diaphragm design, check the diaphragm for tears and/or clogged or obstructed bleed hole or pilot orifice.Torn diaphragm must be replaced.
	3.Check all springs.If broken, replace.
Externalleakage at sleeve flange orjoint between body and cover	Check that the sleeve and/or cover screws are torqued to specifications. Ifleakage persists, replacement of diaphragm assembly or fange O-ring may be required and/or bodies or covers with damaged sealing surfaces may have to be replaced.
Externalleakage at speed control device	CheckO-rings for damage and replace ifnecessary.
Internal leakage	1.Disassemble valve, remove extraneous matter, and clean parts in a mild soap and watel solution.
	2. Examine diaphragm sealing surface for dirt. Remove all foreign particles. Examine orifice fornicks.Damaged parts must be repaired or replaced.
	3.Check plungerreturn spring.Replace if broken.
Chatter or buzz sound when energized	1.Remove power from the coil.
	2.Inspect the plunger and sleeve forexcessive wear or contamination

Seeking For Global Distributors

DELCO

Specialized Control Valve Manufacturer

DELCO VALVE CO.LTD

Phone: +86-159 8960 2972

Website:www.delcofluid.com/www.delcovalves.com / www.delcovalve.ru

E-mail:sales@delcofluid.com

Address:Building 8A#, Tiansheng Industrial Park, Wanjiang Street, Dongguan,China