H009 AKH-0.66 L leakage current transformer V1.0

1.Product feature

AKH-0.66 L series residual current transformer is used for the collection of low voltage residual current signal, and can be used with electrical fire monitoring device ARCM series, motor protection device ARD series and residual current relay ASJ series. The product has easy to install, small size and other characteristics.

2. Explanation for type

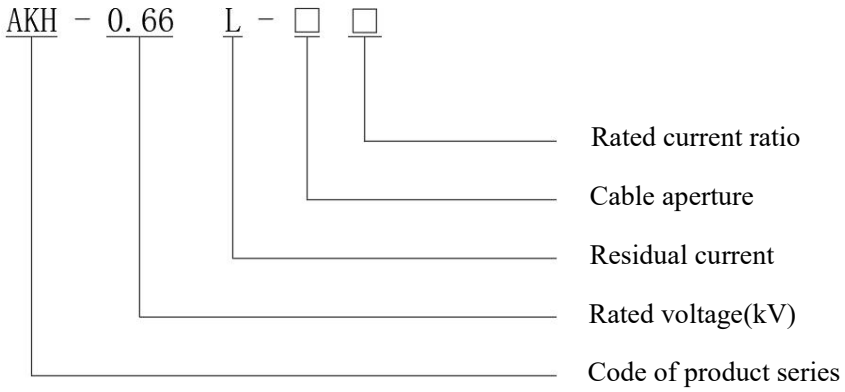

3.Primary wiring

System	TT System	TN-S System	TN-C System	TN-C-S System	IT System
System wiring	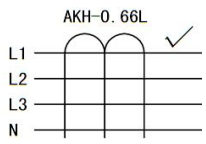	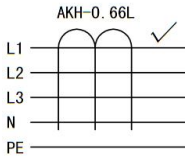	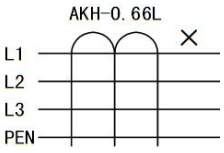	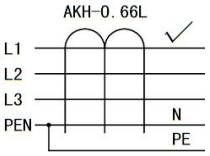	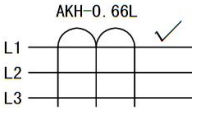

Note:" √ " for the correct wiring.

4. General technical standards

Qualification	Electrical parameters				
Rated primary current	1A	1A	5A	5A	5A
Rated secondary current	0.5mA	1mA	2mA	2.5mA	5mA
Rated continuous thermal current	2A	2A	10A	10A	10A
Frequency	50～60Hz				

Jiangsu Acrel Electrical Manufacturing Co., LTD.
Address: No.5 Dongmeng Road, Dongmeng industrial Park, Nanzha Street, Jiangyin City, Jiangsu Province, China
TEL./Fax: 0086-510-86179960 Web-site: www.jsacrel.com
Postcode: 214405 E-mail: acrelct@email.acrel.cn

Accuracy class	1.0
Voltage	≤660V
Fire retardant grade	UL94-V0
Insulation resistance	≥1M ohms@500Vdc
Withstand voltage	3KV@2mA\1min\50Hz
Insulation heat resistance	E

5.Overall dimensions and technical parameters

5.1 Spec. and size（mm）

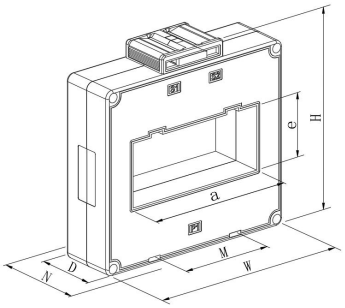

Specification \ Size	Outline size			Through size		Mounting size		Tolerance
	W	H	D	a	e	M	N	
L-80×50II	120	141	45	82	52	60	70.5	±1
L-100×50II	145	155	50	103	55	80	70.5	
L-130×50II	176	160	50	135	55	85	70.5	±2
L-180II	228	115	48	181	35	102	70.5	
L-200×50II	247	172	55	205	60	102	83	±3

5.2 Cross-reference tables of spec. -parameter



Specification	Reference rated current(A)	Primary current(A)	Second output	Precision degree	Rated load(Ω)	Overload factor
L-80×50II	16-100A	5A	5mA	1	100	8
L-100×50II	16-200A					
L-130×50II	100-200A					
L-180II	100-200A					
L-200×50II	250-400A					

5.3 Spec. and size（mm）

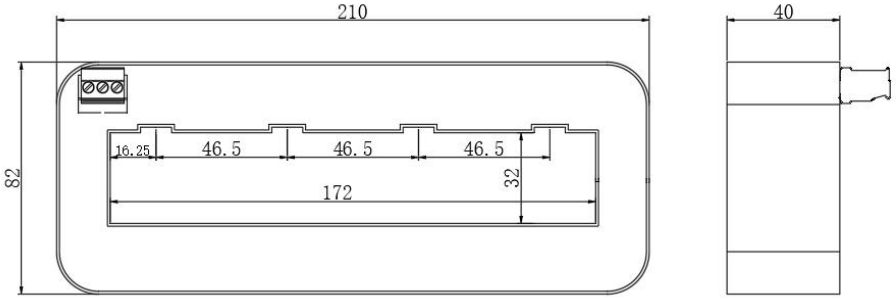

Jiangsu Acrel Electrical Manufacturing Co., LTD.
Address: No.5 Dongmeng Road, Dongmeng industrial Park, Nanzha Street, Jiangyin City, Jiangsu Province, China
TEL./Fax: 0086-510-86179960 Web-site: www.jsacrel.com
Postcode: 214405 E-mail: acrelct@email.acrel.cn

5.4 Cross-reference tables of spec. -parameter



Specification	Reference rated current(A)	Primary current(A)	Second output	Precision degree	Rated load(Ω)	Overload factor
L-170×30	100-200A	5A	5mA	1	100Ω	10

5.5 Spec. and size（mm）

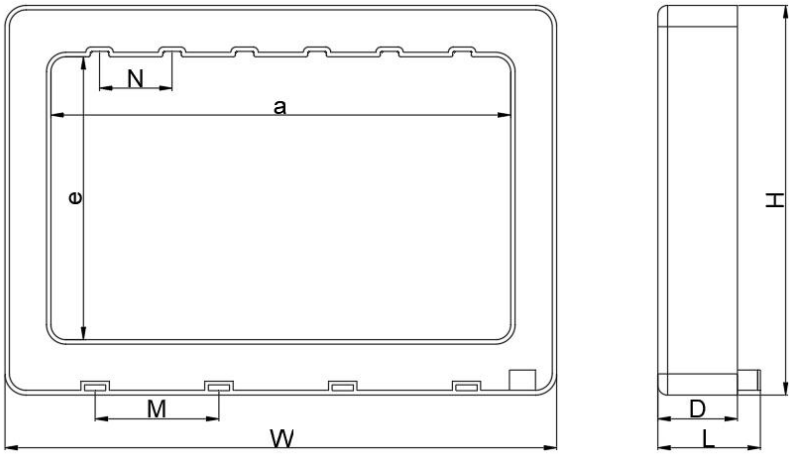

Size / Specification	Reference rated current(A)	Outline size			Through size		Mounting size			Tolerance
		W	H	D	a	e	L	M	N	
L-210×160(PB)	450-800A	262	221	45	210	160	58	70×2	31.5×5	±2
L-260×160(PB)	450-800A	312	220	45	260	160	58	70×3	40×5	
L-300×50(PB)	500-1000A	352	110	45	300	50	58	70×4	49×5	
L-350×50(PB)	500-1000A	402	110	45	350	50	58	70×4	69×3	
L-400×50(PB)	1000-1250A	452	110	45	400	50	58	70×5	69×5	

5.6 Cross-reference tables of spec. -parameter



Specification	Reference rated current(A)	Primary current(A)	Second output	Precision degree	Rated load(Ω)	Overload factor
L-210×160(PB)	450-800A	5A	5mA	1	100	10
L-260×160(PB)	450-800A	5A	2mA	1	100	10
L-300×50(PB)	500-1000A					
L-350×50(PB)	500-1000A					
L-400×50(PB)	1000-1250A					

Jiangsu Acrel Electrical Manufacturing Co., LTD.
Address: No.5 Dongmeng Road, Dongmeng industrial Park, Nanzha Street, Jiangyin City, Jiangsu Province, China
TEL./Fax: 0086-510-86179960 Web-site: www.jsacrel.com
Postcode: 214405 E-mail: acrelct@email.acrel.cn

5.7 Spec. and size（mm）

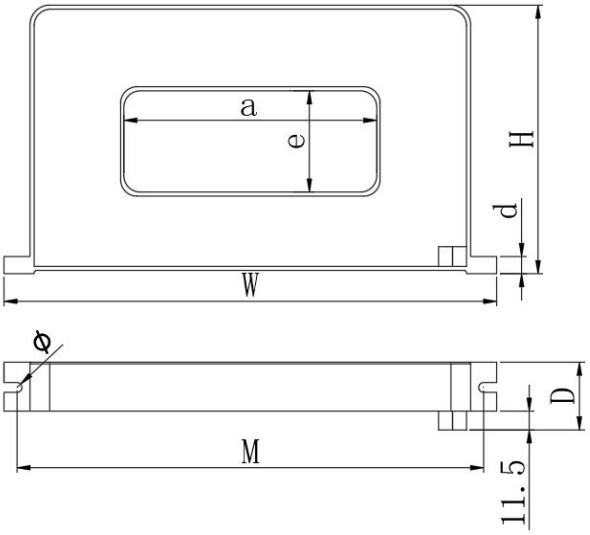

Figure 1

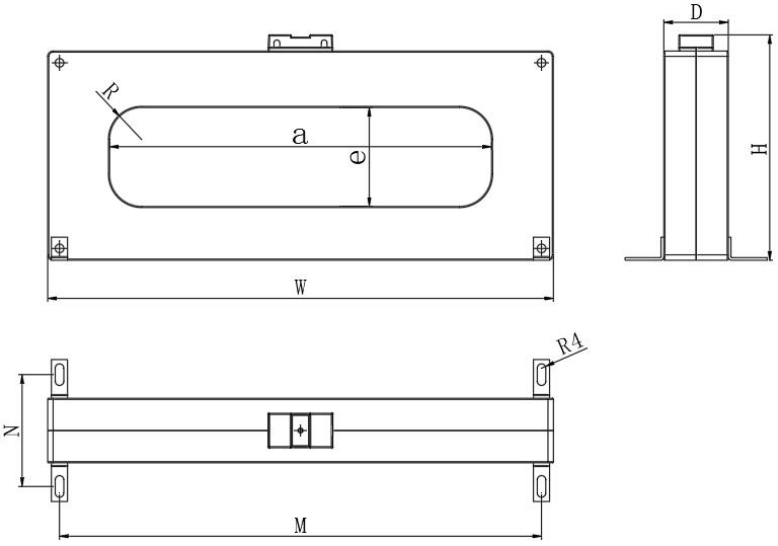

Figure 2

Size / Specification	Outline size			Through size			Mounting size				Tolerance	Note
	W	H	D	a	e	R	ϕ	M	N	d		
L-110×25(PB)	186	70	28	112	25	/	6	171	/	10	±2	Figure 1
L-140×35(PB)	214	81	28	142	35	/	6	200	/	10		
L-190×35(PB)	270	85	28	192	35	/	6	256	/	10		
L-230×45(PB)	310	95	28	232	46	/	6	295	/	10		
L-300×60(PB)	426	127	45	300	60	/	8	396	/	15		
L-400×120(PB)	504	243	60	400	120	50	/	472	112	/		Figure 2
L-500×160(PB)	612	291	60	500	160	70	/	580	112	/		

5.8 Cross-reference tables of spec. -parameter



Specification	Primary current(A)	Second output	Precision degree	Rated load(Ω)	Overload factor
L-110×25(PB)	5A	2mA	1	100	10
L-140×35(PB)					
L-190×35(PB)					
L-230×45(PB)					
L300×60(PB)					
L-400×120(PB)					
L-500×160(PB)					

Jiangsu Acrel Electrical Manufacturing Co., LTD.
Address: No.5 Dongmeng Road, Dongmeng industrial Park, Nanzha Street, Jiangyin City, Jiangsu Province, China
TEL./Fax: 0086-510-86179960 Web-site: www.jsacrel.com
Postcode: 214405 E-mail: acrelct@email.acrel.cn

5.9 Spec. and size（mm）

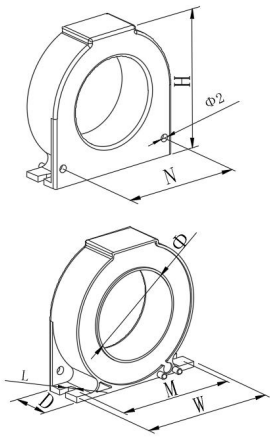

Size / Specification	Outline size			Through size	Mounting size				Tolerance
	W	H	D	Φ	M	N	L	Φ2	
L-20	50.5	44.5	19	20	40.5	/	/	/	±1
L-45	75	75	22	46	65	65	4.5	4	
L-80	120	120	23	81	105	105	4.5	4	
L-100	140	140	23	100	124	124	4.6	4	
L-150	196	205	24	150	175	180	4.6	6	
L-200	240	247	28	200	214	212	5	6	

Note: The outgoing wire is a double-core shielded wire with standard length of 2cm ± 10cm. Customers can customize it accroding to their needs.

5.10 Cross-reference tables of spec. -parameter



Specification	Reference rated current(A)	Primary current(A)	Second output	Precision degree	Rated load(Ω)	Overload factor
L-20	0-16A	1A	1mA	1	100Ω	10
L-45	16-150A					
L-80	150-300A					
L-100	300-600A					
L-150	600-1000A					
L-200	1000-1500A					

5.11 Spec. and size（mm）

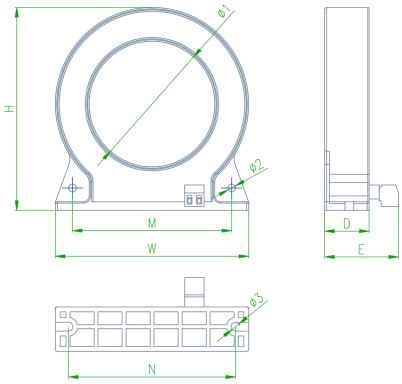

Size / Specification	Outline size				Through size	Mounting size			
	W	H	D	E	Φ1	M	N	Φ2	Φ3
L-30C	60	65	25	39	30	46.5	50.5	4	4.5
L-45C	75	85	25	39	45	59	63.5	4	4.5
L-65C	100	105	25	39	65	82.4	86.5	4	4.5
L-85C	127	131	28	42	85	105.3	111.5	4	4.5
L-105C	147.5	148	28	42	105	121.8	132	4	4.5

Jiangsu Acrel Electrical Manufacturing Co., LTD.
Address: No.5 Dongmeng Road, Dongmeng industrial Park, Nanzha Street, Jiangyin City, Jiangsu Province, China
TEL./Fax: 0086-510-86179960 Web-site: www.jsacrel.com
Postcode: 214405 E-mail: acrelct@email.acrel.cn

5.12 Cross-reference tables of spec. -parameter



Specification	Reference rated current(A)	Primary current(A)	Second output	Precision degree	Rated load(Ω)
L-30C	0-63A	1	1mA	1	100
L-45C	0-160A				
L-65C	0-250A				
L-85C	0-400A				
L-105C	0-630A				

5.13 Spec. and size（mm）

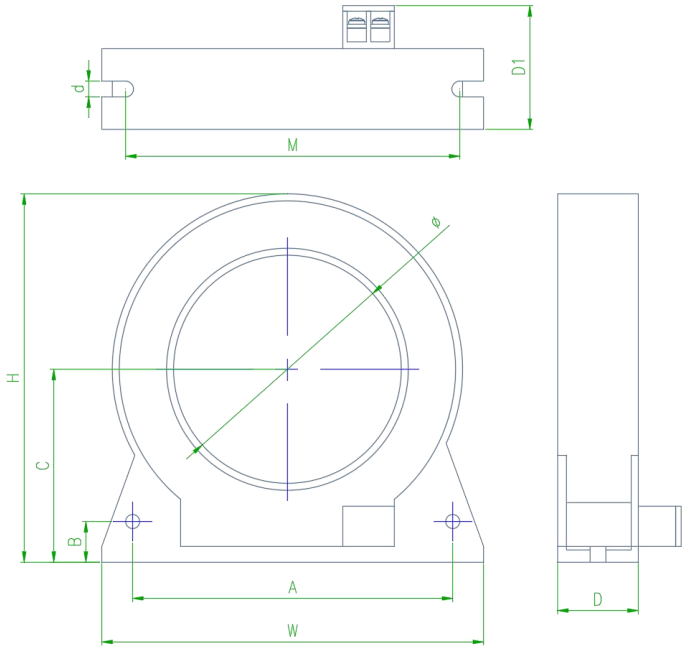

Size / Specification	Outline size			Through size	Mounting size						Tolerance
	W	H	D	ϕ	M	A	B	C	D1	d	
L-30（PB）	76	67	25	30	69	58	11.5	35	36	5	±2
L-45（PB）	98	86	28	46	87	72	13	45	39	5	
L-65（PB）	124	105	28	65	110	96	14	53	39	6	
L-80（PB）	140	130	32	80	122	106	18	67.5	43	6	
L-100（PB）	167	148	32	100	153	129	21	74.5	43	6	
L-120（PB）	188	172	32	120	170	142	20	88	43	6	
L-150（PB）	225	206	32	150	205	178	34	103.5	43	6	

Jiangsu Acrel Electrical Manufacturing Co., LTD.
Address: No.5 Dongmeng Road, Dongmeng industrial Park, Nanzha Street, Jiangyin City, Jiangsu Province, China
TEL./Fax: 0086-510-86179960 Web-site: www.jsacrel.com
Postcode: 214405 E-mail: acrelct@email.acrel.cn

5. 14 Cross-reference tables of spec. -parameter



Specification	Reference rated current(A)	Primary current(A)	Second output	Precision degree	Rated load(Ω)
L-30（PB）	0-63A	5	5mA	1	100
L-45（PB）	0-160A				
L-65（PB）	0-250A				
L-80（PB）	0-400A				
L-100（PB）	0-630A				
L-120（PB）	0-800A				
L-150（PB）	0-1000A				

Jiangsu Acrel Electrical Manufacturing Co., LTD.
Address: No.5 Dongmeng Road, Dongmeng industrial Park, Nanzha Street, Jiangyin City, Jiangsu Province, China
TEL./Fax: 0086-510-86179960 Web-site: www.jsacrel.com
Postcode: 214405 E-mail: acrelct@email.acrel.cn