259

WHD Temperature & Humidity Controller

Installation and operation instruction V1.8

ACREL CO.,LTD

Declaration

No part of this publication may be reproduced, stored in a retrieval system, or transmitted in any form by any means, electronic, mechanical photocopying, recording，or otherwise without prior permission of AcreL . All rights reserved.

This company reserve power of revision of product specification described in this manual, without notice. Before ordering, please consult local agent for the latest specification of produc

目　　录

1 General 1
2 Operational principle 1
3 Type explanation 1
4 Technical parameter 2
5 Product specification and functions 3
6 Wiring mode 4
7 Product operation manual 6
7.1 Display introduction 6
7.2 System powered 7
7.3 Working status 7
7.4 System setting mode 7
8 Communication manual 12
8.1Communication 12
8.2 Communication format explanation 15
APPENDIX 17
Sensor 17
1 General 17
2 Type explanation 17
2.1 WHD Series Intelligent purpose temperature & humidity controller sensor: 17

1 General

The controller for temperature and humidity is suitable for adjustment and control of temperature and humidity in equipments of high voltage switchgear, terminal box, ring network panel, box transformer substation etc. It can effectively protect relevant equipment from faults resulting from excessive low or high temperature, creepage or flashover etc.from humidity or condensation.

2 Operational principle

The controller for temperature and humidity mainly consists of three parts of transmitter, controller, heater(or fan etc.), its operational principle is shown as following:

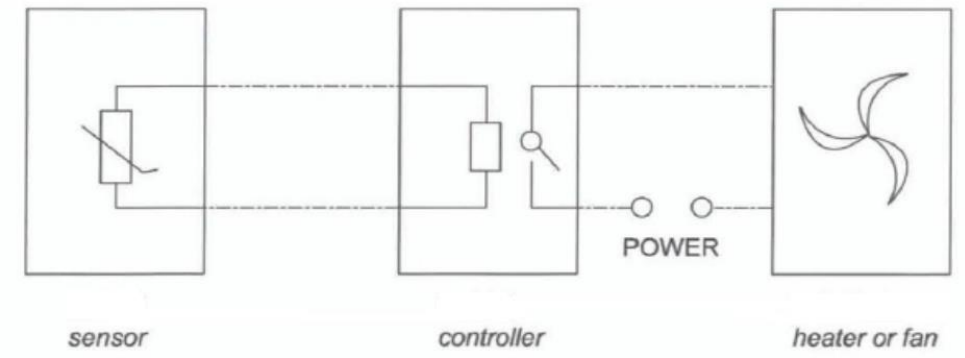

The message of temperature and humidity in the box is detected by the sensor and analyzed by the controller: When environmental temperature, humidity is up to the presetting value or exceed the presetting value, the controller is giving related signal to contects of relay, then the heater(or fan) is energized and working to heat of dehumidifying; after environmental temperature,humidity is well below the presetting value,the heater(or fan) is deednergized and stop working. In addition to its basic functions, the specific product with different type possess secondary functions such as alarming output for wire-breaking,communication,forced heating etc.

3 Type explanation

WHD □ - □ / □

Adding function: C-RS485 port
M-transmitting output
J-alarming outpuput

Control function selection:11-one channel temperature,humidity
22-two channels temperature,humidity
33-three channels temperature,humidity

outline:

outline code	panel frame （mm）
48 square	48*48
72 square	75*75
46 rectangular	120*60
20R Guide rail type	DIN35mm

Product series code:intelligent temperature & humidity controller

Note:

(1) Number 0f temperature, humidity(or temperature) sensor to be connected with WHD48，WHD72、WHD20R，WHD46 is up to 1,2, 3 respectively;

(2) Every sensor match with two control output contacts(passive), connected with heater and fan respectively,the heater is used for rising temperature or removing moisture,the fan is used for decreasing temperature;

(3) uxiliary function of WHD46:RS485 communication,alarming output function and transmitting function. Only one can be selected.

Auxiliary function of WHD48:RS485 communication.

Auxiliary function of WHD72:Alarming output function,RS485 communication and transmitting function.The latter two can only be selected.

Auxiliary function of WHD20R:RS485 communication and alarming output function.Both can be selected at the same time.

”-C”for communication,”-J”for alarming,”-M”for transmitting.

(4) The connecting wire between sensor and controller must use four-core shielded cable. And its maximum length must not exceed 20 m.

4 Technical parameter

Technical parameter		Value
Measuring range	Temperature	-40.0℃～99.9℃
	Humidity	0%RH～99%RH
Precision	Temperature	±1℃
	Humidity	±5%RH
Transmitting output		DC 4～20mA 或 DC 0～20mA
Set range of controlling parameter	Heating for Temperature rising	-40.0℃～40.0℃
	Blowing for temperature decreasing	0.0℃～99.9℃
	Humidity control	20%RH～90%RH
output contact capacity		5A/AC250V
Start/stop gap		5
Communication port		RS485,MODBUS(RTU)协议
Auxiliary power	Voltage	AC 85～265V DC 100～350V
	Consumption	Basic power consumption(≤0.8w)； relay power consumption(each channel≤0.7w)

Insulation resistance		≥100MΩ
power-frequency withstand voltage		power with shell,touchable metal parts/ power with other terminal group 2kV/1min(AC,RMS)
average work time without stoppage		≥50000h
Working condition (controller)	Temperature	-20℃～+60℃
	Humidity	≤95%RH，without condensation and corrosive gas
	Altitude	≤2500 m

1.Start/stop gap: In the control process,for the execution part (heater or fan) , the difference between starting temperature(humidity) and stopping temperature (humidity).

2. The default is heating when the temperature is ≤ 5 ℃, stopping heating when the temperature reaches 10 ℃, stopping heating and dehumidification when the humidity is ≥ 85%, stopping heating and dehumidification when the humidity is below 80 ℃, running the fan when the temperature is>40 ℃, and stopping the fan when the temperature is<35 ℃.

5 Product specification and functions

WHD48 Type with auxiliary function:signal communication"-C"

Type	Function	Sensor（Pcs）	Mounting mode	Outline,size
WHD48-11	One channel temperature, humidity control	WH-3(1)	Embedded catout：45x45	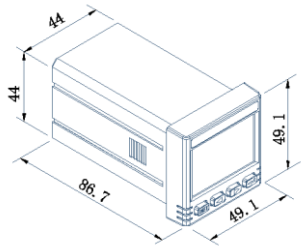

WHD46 Type with auxiliary function:fault alarm"-J",signal communication"-C",transmission"-M"

Type	Function	Sensor（Pcs）	Mounting mode	Outline,size
WHD46-11	One channel temperature, humidity control	WH-3(1)	Embedded catout：116x56	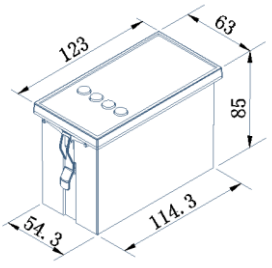
WHD46-22	Two channel temperature, humidity control	WH-3(2)		
WHD46-33	3 路温湿度控制	WH-3(3)		

WHD72 Type with auxiliary function:fault alarm"-J",signal communication"-C",transmission"-M"

Type	Function	Sensor（Pcs）	Mounting mode	Outline,size

WHD72-11	One channel temperature, humidity control	WH-3(1)	Embedded catout：67x67	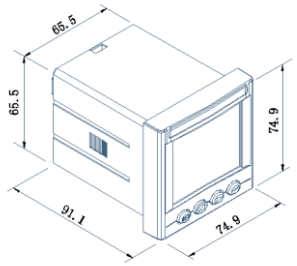
WHD72-22	Two channel temperature, humidity control	WH-3(2)		

WHD20R Type with auxiliary function:fault alarm"-J" ,signal communication"-C",both are optional

Type	Function	Sensor（Pcs）	Mounting mode	Outline,size
WHD20R-11	One channel temperature, humidity control	WH-3(1)	guide rail typ：DIN35mm	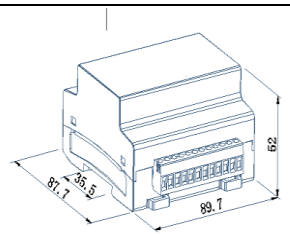
WHD20R-22	Two channel temperature, humidity control	WH-3(2)		

6 Wiring mode

WHD48 Type

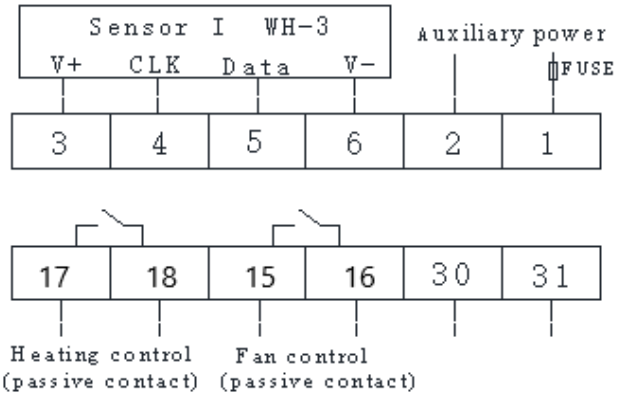

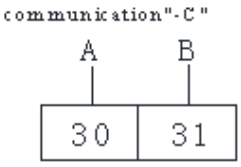

WHD72 Type

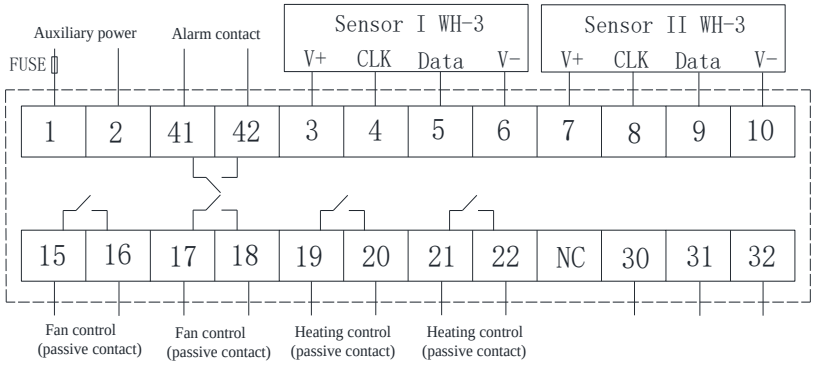

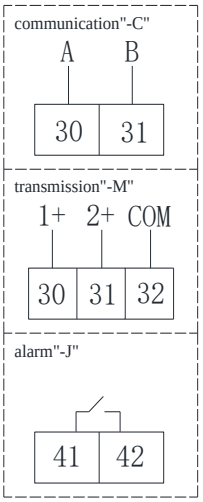

WHD20R Type:

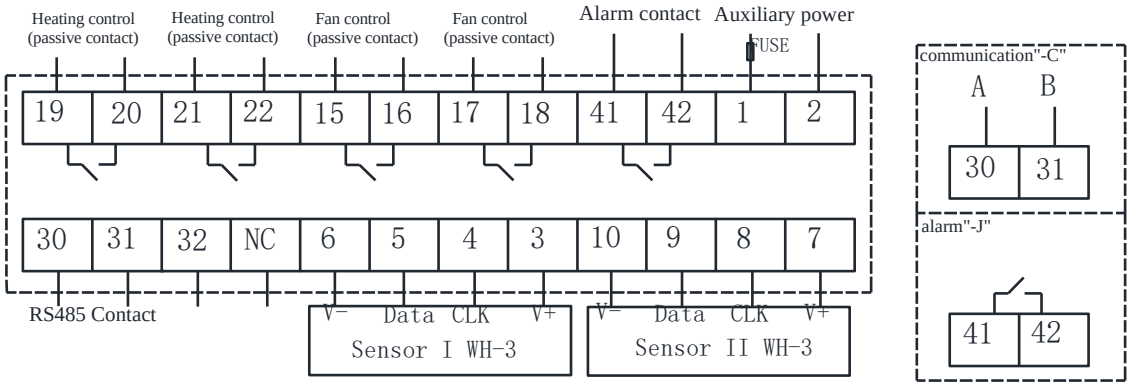

WHD46 Type:

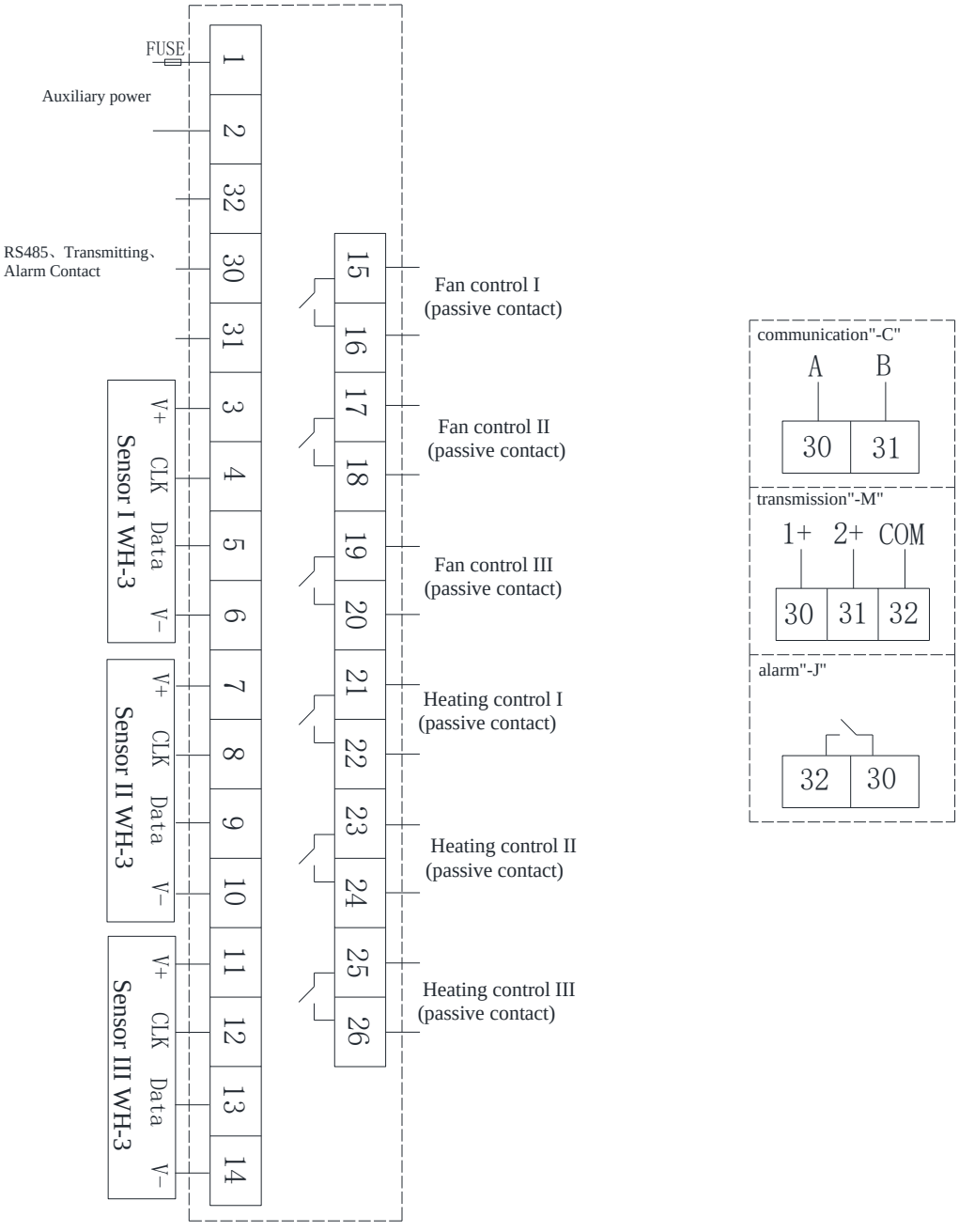

An example of wiring for the communication part is shown below:

Correct wiring method:the communication cable shield is connected to the ground.

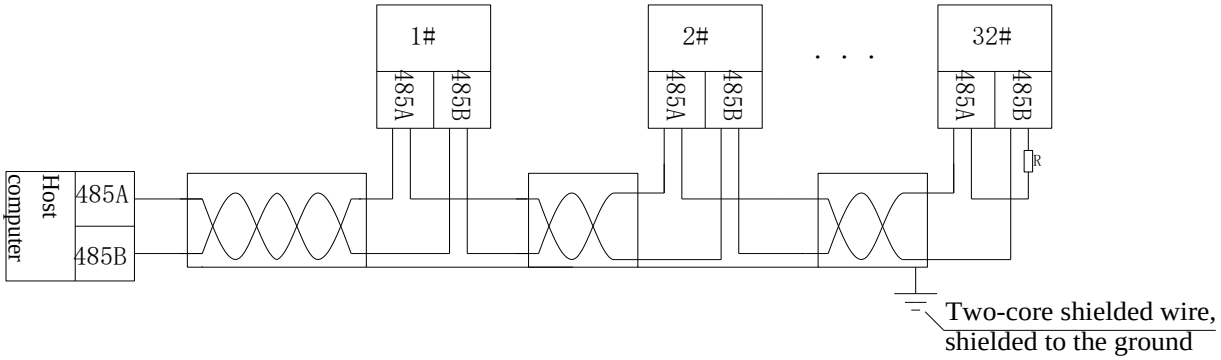

It is recommended to add a matching resistor between A and B of the end meter,and the resistance range is 120Ω-10KΩ.

7 Product operation manual

7.1 Display introduction

7.1.1 Front diagram

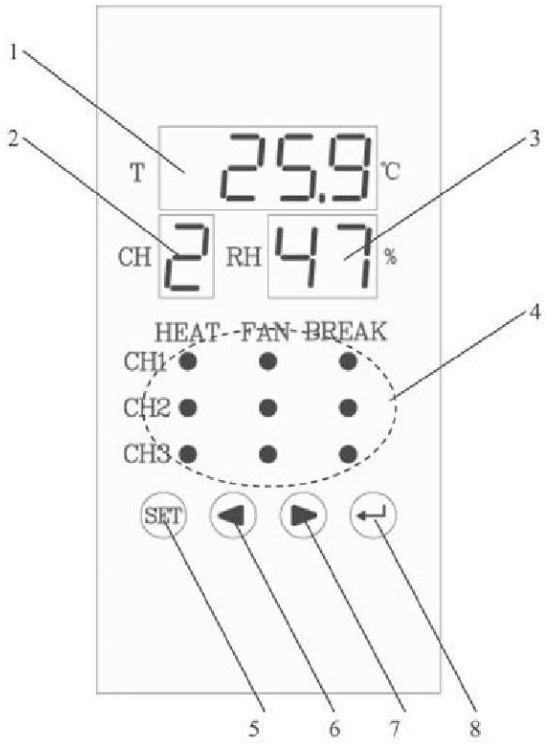

7.1.2 Legend explanation

No.	Name	Status	Explanation
1	temperature Area Temp.area	XX.X℃	Display current-measured temperature value,range:-40.0℃～ 99.9℃ Display menu and data for keystroke programming
2	Channels	X	Display current-measured channels,rang：1～3

3	humidity Area Humidity area	XX%	Display current-measured humidity value,range：20%～90%
4	Working status	Indicator lightering	Working state of 1,2,3,channels,heating (HEAT), Blowing (FAN),fault of heating (BREAK)
5	SET	Pressing	Selecting operational function,set up programming
6	Left directional key	Pressing	Look over data or change data
		Keep Pressing	Keep Pressing the key about 3 seconds,all channels are in heating
7	Right directional key	Pressing	Look over data or change data
		Keep Pressing	Keep Pressing the key about 3 seconds,all channels are in blowing
8	ENTER key	Pressing	Confirm function or go to next menu

7.2 System powered

After wiring correctly according to the instraction，power on and enter into the measuring condition.

7.3 Working status

7.3.1 Measurement

Under measuring condition , Area 1, 2, 3 display currently: measuring channel and temperature value，humidity value , temperature value,humidity value circling measurement and display of three sensor's channels.

7.3.2 Control

When environmental temperature value or humidity value satisfy the presetting working condition , starting the heater or fan, while corresponding indicator lights (Area4) , when the heater is failure, working without as per the normal working condition, the corresponding indicator for heating-fault lights to give alarming.

7.3.3 Control test

Under the normal working condition, hold pressing the left directional key about 3 seconds,all the allowed channels are in heating; hold pressing the right directional key over 3 seconds,all the allowed channels are in blowing .

7.3.4 Alarm

When the heater is failure,working without as per the normal working condition, the corresponding indicator for heating-fault lights to give alarming.when the temperature exceeds the set value,the data of corresponding channel flashes.

7.4 System setting mode

7.4.1 Entry/exit system setting mode

Under the normal working condition，hold pressing the SET key about 3 seconds,entry in system setting mode, stroke ENTER and input the pass words , the deliver default value as 0000, if pass words is correct (display YES) , enter into the main menu automatically.

After enter into the main menu , Area 1 display "CH1", stroke ENTER, enter into the working parameter setting of channel 1, press the left/right key to switch to other menu with same level, this level menu has "CH2", "CH3", "COMM ","DISP"， "CTRL"， "VErn",setting up working parameter of channel 2, channel 3,communication, display mode, look over software version respectively.

7.4.2 Setting channel parameters

The parameter setting process of CH1, CH2,CH3 is one and the same. Taking CH1 as example , to explain clearly: After setting entry system, menu and data display in Area 1 , after setting entry channel, Area 2 display channel sequence number. Display before entry in.CH1:

	Example	Explanation
1	CH1	Single click ENTER,enter into parameter setting of channel 1
2		Blank

Single click ENTER the display as follows:

	Example	Explanation
1	ON	Allow channel 1,selecting left/right key for "on"/"off",click ENTER for confirm
2	1	Current setting is the first channel

Selecting "on"，Single click ENTER the display as follows:

	Example	Explanation
1	H.dry	Single click ENTER for entry, setting humidity value for starting process of heating and removing moisture
2	1	Current setting is the first channel

Single click ENTER the display as follows :

	Example	Explanation
1	85	Single click left/right key for revising , hold pressing for increasing/decreasing of quickly, click ENTER for confirm
2	1	Current setting is the first channel

Single click ENTER the display as follows:

	Example	Explanation
1	HEAt	Single click ENTER for entry, setting temperature value for starting process of heating and temperature rising
2	1	Current setting is the first channel

Single click ENTER the display as follows :

	Example	Explanation
1	5.0	Single click left/right key for revising , hold pressing for increasing/decreasing of quickly, click ENTER for confirm
2	1	Current setting is the first channel

Single click ENTER the display as follows:

	Example	Explanation
1	ALM.H	Single click ENTER , setting ifopen heating-fault alarm
2	1	Current setting is the first channel

Single click ENTER the display as follows:

	Example	Explanation
1	OFF	selecting left/right key for "on"/"off",click ENTER for confirm
2	1	Current setting is the first channel

Single click ENTER the display as follows:

	Example	Explanation
1	FAn.C	Single click ENTER , setting temperature value to start blowing-reducing temperature
2	1	Current setting is the first channel

Single click ENTER the display as follows:

	Example	Explanation
1	40.0	Single click left/right key for revising , hold pressing for increasing/decreasing of quickly, click ENTER for confirm
2	1	Current setting is the first channel

Single click ENTER the display as follows:

	Example	Explanation
1	HYS.H	Single click ENTER for entry, setting hysteresis value of heating to remove moisture
2	5	Single click left/right key for revising , click ENTER for confirm
1	HYS.d	Single click ENTER for entry, setting hysteresis value of heating to remove moisture
2	5	Single click left/right key for revising , click ENTER for confirm
1	HYS.U	Single click ENTER for entry, setting hysteresis value of heating to remove moisture
2	5	Single click left/right key for revising , click ENTER for confirm

Single click the Enter, return the main menu, use left/right key to select other main menu and setup the optional item. The communication "COMM"may set up Local address (1～247) and Communication baud rate value (1200, 2400,4800,9600,19200) . The display mode"dISP" is used to set three channels: interval in circling measurement display; closed circling or interval for 2s,4s,6s,8s. AI random position of main menu ,single click SET to select storage or not and exit system setting, then return back normal working mode.

7.4.3 Set up system password

Press SET and ENTER simultaneously about three seconds, display: "CodE", Single click ENTER for entry, type current system password. Single click ENTER to confirm the typed password, the correct password display "yES",and switch to "n.Cod" automatically, single click entry to type new password, press ENTER to select storage or not, then to exit..

At random setting position, if within 1 minutes, no effective key is pressed, the system return to measuring status automatically the setting is not stored.

7.4.4 User’ s Programming flow diagram

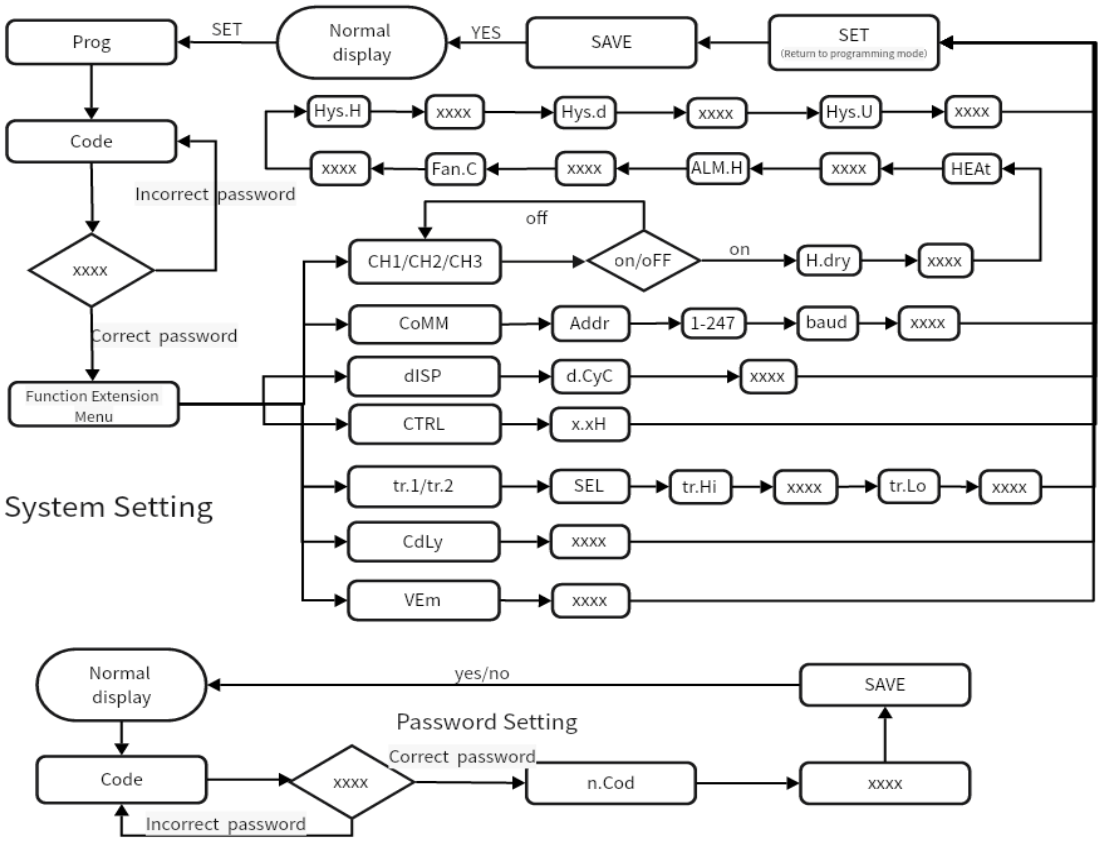

Character	Explanation	Character	Explanation
Prog	Access programming	CoMM	Communication
CodE	Password	Addr	Address
xxxx	Figure and others	bAud	Baud rate
CH1/CH2/CH3	Access channels 1/2/3	diSP	Display setting
H.dry	Heating to remove moisture	d.Cyc	Circling display
HEAt	Heating to rise temperature	CdLy	Length of communication frequency interval
ALM.H	Heater alarm for broken wire	VErn	Version No. of software
Fan.C	Blow to reduce temperature	n.Cod	Typing password
Hys.H	Hysteresis value of heating to remove moisture	SAVE	Storage
Hys.d	Hysteresis value of heating to rise temperature	ruPt	Sensor failure
Hys.U	Hysteresis value of blow to reduce temperature	SEL	relevant output select
tr.1/tr.2	Deliver access programming	tr.Lo	programming low
tr.Hi	programming high		
CTRL	Forced heating/blowing time setting	x.xH	Time , 0.0H: Keep on

Note 1: WHD channel open settings: Long press SET to display PROG, press enter to display CODE, continue pressing enter to display CH1, press enter, if the channel is closed, the current display is OFF and needs to be changed to ON. After making the changes, you need to save them. First press Enter, then press SET until SAVE appears, and then press Enter to confirm.

Note 2: WHD address setting guidance: Long press SET to display PROG, press Enter to display CODE, continue pressing Enter to display CH1, then right-click to switch to COMM, press Enter to display ADDR, this is the address. Press Enter to change, after changing, first press Enter, then press SET until SAVE appears, press Enter to confirm.

8 Communication manual

8.1Communication

This chapter mainly explains how to use software to operate this series meter by communication interface. You are required to obtain the knowledge of MODBUS protocol and have general comprehension of the meter's function and application after reading through out other content of this manual.

The content of this chapter includes: brief introduction of MODBUS protocol, detailed explanation of communicate application format,application details of the meter and parameter address table.

8.1.1 MODBUS Communication

WHD Series Intelligent Temperature & Humidity Controller. MODBUS protocol defines detailedly checkout code, data sequence and so on which are necessary content of specific data change. MODBUS protocol uses half duplex connection mode in one communication wire. That means signals of a separate wire transfer along contrary direction. Firstly,signal of host computer seeks address to a exclusive terminal unit,then terminal unit sends out responding signal that is transmitted to the host computer with contrary direction.

MODBUS protocol only allows communication between mainframe(PC, PLC etc.) and terminal unit, it doesn't permit data change between separate terminal equipment. Each terminal unit will not occupy communication wire while initializing, it only responses to rogatory signal itself.

8.1.2 Searching-responding period

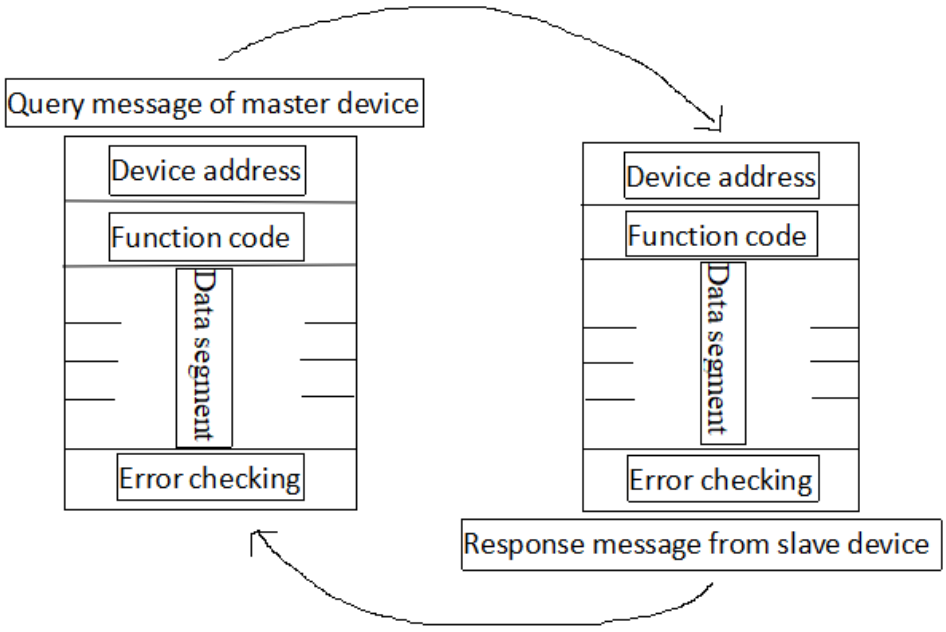

Searching

Function code of searching information tells the selected slave unit should carry out which kinds of function. Data segment includes any addition information that the slave unit will operate the function. For example, function code 03 required reading keep register from slave unit and returning their content. Data segment should contain the information that will be sent to slave unit: read from which register and the number of Register.Error detecting region supplies slave unit with a method that can validate if the information content is correct.

Responding

If the slave unit brings a normal response,function code of the response information is the response of function code in searing information.Data segment includes collecting data of slave unit: such as register value or state. If error occurs, function code will be amended to indicate the response information is wrong, meanwhile, data segment contains the code which describes this error. Error detecting region allows main unit affirm if the information is usable.

8.1.3 Transmit mode

Transmit mode is a series of data configuration in a data frames and finity rule used for data transmission. Transmit mode that is compatible with MODBUS protocol-RTU mode is defined as follows.

Bit of each byte

- 1 start bit
- 8 data bits, the minimal efficient bit delivering first
- No parity check bit
- 1 stop bit

Error checking: CRC(circle redundancy check)

8.1.4 Protocol

When data frame reaches terminal unit, it enters searching addressed unit from a simple "port" .The unit takes out the "envelop" (data head) and reads data, then carries out mission required by data if there is no error.After that, the unit adds the produced data to "envelop" and returns data frame to sender. Response data returned includes: Address of terminal slave unit, Function carried out, Data produced and a Check. There is no successful response if any error occurs, or return to a false frame.

Data frame format

Address	Function	Data	Check
8-bits	8-bits	N x 8-bits	16-bits

Address region

Address region which is the beginning of frame consists of a byte(8 bits binary code). The decimalist is 0-255, and the system uses 1-247. The bits indicate address of terminal unit appointed by users which acquire data from the connected host computer. Address of each terminal unit must be exclusive, and the address searched terminal will bring address search. When terminal returns a response, slave address data of response tells host computer with which terminal is communicating.

Function region

Function region code tells the address searched terminal which function to carry out. Function codes used in

meter are as follows.

Code	Meaning	Action
03 or 04	Read data register	Acquire one or several current binary value of register
16	Preset multi-register	Set binary value to series of multi-register

Date region

Data region includes the data which terminal needed to carries out specific function or which is sampled when terminal responses searching. The content of data maybe numerical value, reference address or setup value. For example: Function

Error-checking region

Check region allows error between host computer and terminal transmission. Sometimes because of electrical noise and other disturbance，a set of data may change while transmitting from one unit to another,error- checking can assure host or terminal not to answer the changed data.It improves the security and efficiency of system. Error-checking adopts CRC16 method.

8.1.5 Protocol

CRC region occupies 2 bytes, binary value 16 bits. CRC value is accounted by transmit unit,then adds to data frame. Receiver unit accounts CRC value again while receiving data, then compares with the value of CRC region.If the two are unlikeness, there is an error.

While CRC operating，Preset 16 bits register 1 beforehand, then operate the 8 bits of each byte in data frame and current value of register Continuously.Only 8 data bits of each byte participate in creating CRC, which is not influenced by start bit, stop bit and parity bit. While creating CRC. 8 bits of each byte exclusive OR with the content in register. The result is moved to low bit, "0" is used in high bit. LSB moves out and will be detected, if 1, the register carries out a exclusive OR operation with a preset fixed value(OA001H), if the lowest bit is 0, do nothing.

Operation above carries repeatedly till 8 bit moving is completed. When the last bit moves，next 8 bits carries out exclusive OR operation with current value of register. while operating another said 8 bit moving exclusive OR operation. AII bytes are operated, CRC value is the final value.

Flow to create a CRC:

- Preset a 16 bits register OFFFFH beforehand,which is called CRC register.
- The 8 bits of first byte in data frame carries out exclusive OR operation with the low byte in CRC register and store the result in CRC register.
- Move CRC register one bit to right, define the highest 0, move out the lowest and check it.
- If the lowest bit is 0, repeat step 3; if is 1, the register carries out a exclusive OR operation with a preset fixed value (OA001H)
- Repeat the step 3 and 4 till the eighth moving. A whole 8 bits is transacted.
- Repeat step 2 to 5 to deal with next 8 bits till all

bytes to be transacted.

- CRC value is the final CRC register value.

In addition, there is a way to account CRC by presetting a table beforehand. The main

characteristic is speediness of account, but the table needs biggish storage space.

8.2 Communication format explanation

Examples as follows is used as tables (hexadecimal).

Addr	Fun	Data start reg hi	Data start reg lo	Data #of reg hi	Data #of reg lo	CRC16 lo	CRC16 hi
01H	03H	00H	00H	00H	03H	05H	CBH

8.2.1 Reading(function code 03 or 04)

Searching data frame

This function allows user acquire system parameter and data of sampled and recorded by unit. It is not limited for data number of required by host computer but can't beyond the defined address range.

The following example show that from 01 slave computer to read two collected basic data reading, CH1 temperature value and humidity value, address of temperature value is 0003H， address of humidity value is 0004H，both length is 2 byte.

Addr	Fun	Data start reg hi	Data start reg lo	Data #of reg hi	Data #of reg lo	CRC16 lo	CRC16 hi
01H	03H	00H	01H	00H	02H	95H	CBH

Response data frame

Response includes slave computer address,function code,byte length of data,data and CRC error-checking.

Following example is response of reading CH1 temperature,humidity value.

Addr	Fun	Byte count	Data1 hi	Data1 lo	Data 2 hi	Data2 lo	CRC16 lo	CRC16 hi
01H	03H	04H	01H	20H	02H	5EH	7AH	9DH

temperature= (0120H)/OAH = 288/10 = 28.8℃

humidity= (025EH)/OAH = 606/10 = 60.6%

The address table for reading parameters is shown as following：

Addr	Data Content	Data type	Read/Write	Command word	Note
0	Working condition:bit0～bit3 are the first ways Working condition:bit 4～bit7 are the second ways Working condition:bit8～bit11 are the third ways Bit0 Heater status 0=normal 1=fault Bit1 Sensor status 0=normal 1=fault Bit2 Heating status 0=cease 1=heating Bit3 Blast state 0=cease 1=blast	Unsigned int	R	03、04	0～4095
1	Temperature value measured in channel 1	signed int	R	03、04	
2	Humidity value measured in channel 1	signed int	R	03、04	
3	Temperature value measured in channel 2	signed int	R	03、04	
4	Humidity value measured in channel 2	signed int	R	03、04	
5	Temperature value measured in channel 3	signed int	R	03、04	
6	Humidity value measured in channel 3	signed int	R	03、04	

7	Meter communication address	Unsigned int	R/W	03、04 / 16	1～247
8	Meter communication baud rate	Unsigned int	R/W	03、04 / 16	0～4 show 1200～19200 respectively
9	Alarm permission and channel permission bit0～bit1 are the first ways bit2～bit3 are the second ways bit4～bit5 are the third ways bit0 fault detection of the first heater: 0 permit 1 prohibit Bit1 is the first channel open : 0 permit 1 prohibit	Unsigned int	R/W	03、04 / 16	0～63
10	Meter display mode	Unsigned int	R/W	03、04 / 16	Cycling time(S),0FFH indicate non-cycling
11	Temperature set for blowing in channel 1	signed int	R/W	03、04 / 16	0～1000
12	Humidity set for heating in channel 1	signed int	R/W	03、04 / 16	10～999
13	Temperature set for heating in channel 1	signed int	R/W	03、04 / 16	-400～1000
14	Hysteresis value in channel 1	Unsigned int	R/W	03、04 / 16	1～40(low byte)
15	Temperature set for blowing in channel 2	signed int	R/W	03、04 / 16	0～1000
16	Humidity set for heating in channel 2	signed int	R/W	03、04 / 16	10～999
17	Temperature set for heating in channel 2	signed int	R/W	03、04 / 16	-400～1000
18	Hysteresis value in channel 2	Unsigned int	R/W	03、04 / 16	1～40(low byte)
19	Temperature set for blowing in channel 3	signed int	R/W	03、04 / 16	0～1000
20	Humidity set for heating in channel 3	signed int	R/W	03、04 / 16	10～999
21	Temperature set for heating in channel 3	signed int	R/W	03、04 / 16	-400～1000
22	Hysteresis value in channel 3	Unsigned int	R/W	03、04 / 16	1～40(low byte)
23	Hysteresis of heating and cooling in channel 1	Unsigned int	R/W	03、04	1～40(The high byte is heating up,the low byte is the cooling of air blast)
24	Hysteresis of heating and cooling in channel 2	Unsigned int	R/W	03、04	1～40(The high byte is heating up,the low byte is the cooling of air blast)
25	Hysteresis of heating and cooling in channel 3	Unsigned int	R/W	03、04	1～40(The high byte is heating up,the low byte is the cooling of air blast)

8.2.2 Preset multi-register (Function code 16)

Searching data frame

The temperature value set for starting the heater in Channel 1 is 5℃ , its register address is 0012H.

Delivered by host computer:

Addr	Fun	Data start reg hi	Data start reg lo	Data of reg Number Hi	Data of reg Number Lo	Data long	Data hi	Data lo	CRC16 lo	CRC16 hi
01H	10H	00H	0DH	00H	01H	02H	00H	32H	26H	98H

Response data frame

Addr	Fun	Data start reg hi	Data start reg lo	Data of reg Number Hi	Data of reg Number Lo	CRC16 lo	CRC16 hi
01H	10H	00H	0DH	00H	01H	90H	0AH

APPENDIX

Sensor

1 General

The sensor of WHD Series Intelligent Temperature & Humidity Controller adopt external connecting mode, and special housing with advantages of good ventilation, aesthetic appearance, protect inner component effectively，boost service life，easily mounting and wiring.

2 Type explanation

2.1 WHD Series Intelligent purpose temperature & humidity controller sensor:

Type	Function	Wiring	Mounting mode	Outline size
WH-3	One temperature humidity	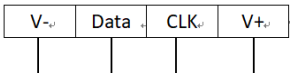 V+、V-、CLK、Data is connected with the controller’s matched wiring terminal respectively.	Guideway type Fixed	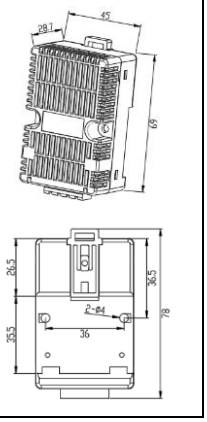

Headquarters: Acrel Co., Ltd.

Trade Company: Acrel E-Business(Shanghai)Co., Ltd.

Address: No.253 Yulv Road, Jiading District, Shanghai, China

TEL.: 0086-21-69156352

Web-site: www.acrel-electric.com

E-mail: sales@acrel-electric.com

Postcode: 201801

Manufacturer: Jiangsu Acrel Electrical Manufacturing Co., Ltd.

Address: No.5 Dongmeng Road, Dongmeng industrial Park, Nanzha Street, Jiangyin City, Jiangsu Province, China

TEL./Fax: 0086-510-86179970

Web-site: www.jsacrel.com

E-mail: sales@email.acrel.cn

Postcode: 214405