Customer picture

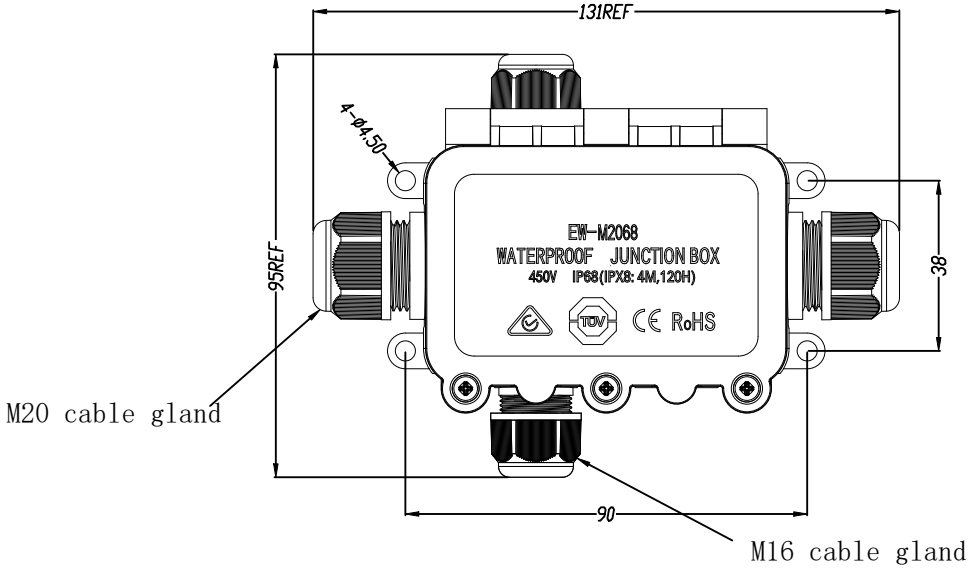

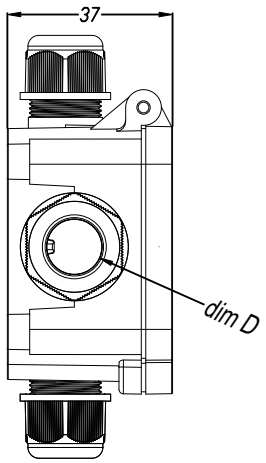

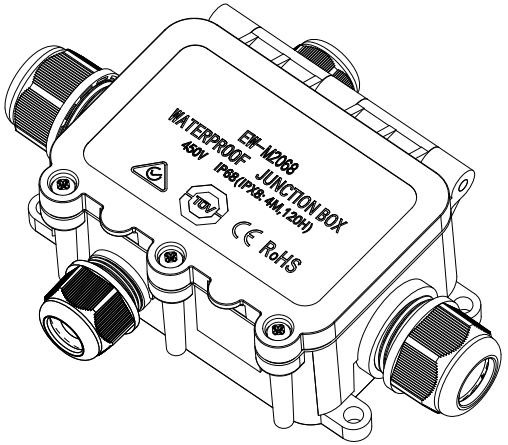

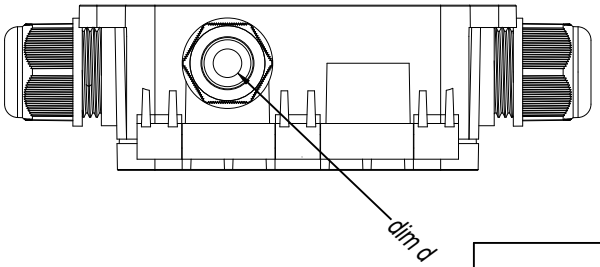

Technical reference:

1、Raw Material: PA66
2、Level of protection: IP68
3、Current rating: 40A
4、Voltage rating: AC 450V
5、Withstanding voltage: AC 2500V
6、Flame-resistant rating: UL94 V-0
7、Cable gague: 0.5mm² ～6mm²
8、Operating temperature: -40～+105℃
9、Certification: RoHS/TUV/SAA/CE
10、Number of product cores:

Ø6.5 mm	Ø3.5～7 mm	Ø8.5 mm	Ø5～9 mm
Ø9.8 mm	Ø7～10 mm	Ø11.5 mm	Ø9～12 mm
Rubbers Diameter d	Outer Cable Diameter	Rubbers Diameter D	Outer Cable Diameter

MARK	ECN	CHANG DESCRIPTION	SIGNATURE	DATE
		NEW VERSION SELEASE	HGH	6.21

TOLERANCE UNSPECIFIED: X. ±0.35; X.X ±0.20; X.° ±3°; X.X° ±2°

UNIT	SCALE	SHEET	REV	P/N	EW-M2068-4TB	DESIGN		
mm	1:1	1/1	A1	TITLE	Waterproof connector	CHKD		
FUCON Xinmen Fucon Electronics Co.,LTD						REVIEW		
						APPD		