REV	DESCRIPTION	DESIGN	DATE
A0	NEW DRAWING	EDDIE	2022.03.31

Raw Material	PA66、COPPER ALLOY、SILICONE
CERTIFICATION	CQC/UL/TUV/RoHS/CE
Flame-resistant rating	UL94 V-2
Level of protection	IP68
Voltage rating/Current rating	450V / 16A
Withstanding voltage	2500V
Cable gague	0.5mm² ～2.5mm²
Operating temperature	-40℃～+105℃

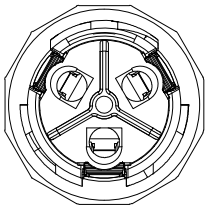

3 Pin

Part Number	Rubbers Diameter	Outer Cable Diameter
EW-P20-03301BB11	⌀11.5mm	⌀9-12mm
EW-P20-03301BB8	⌀8.5mm	⌀5-9mm

Rubbers Diameter

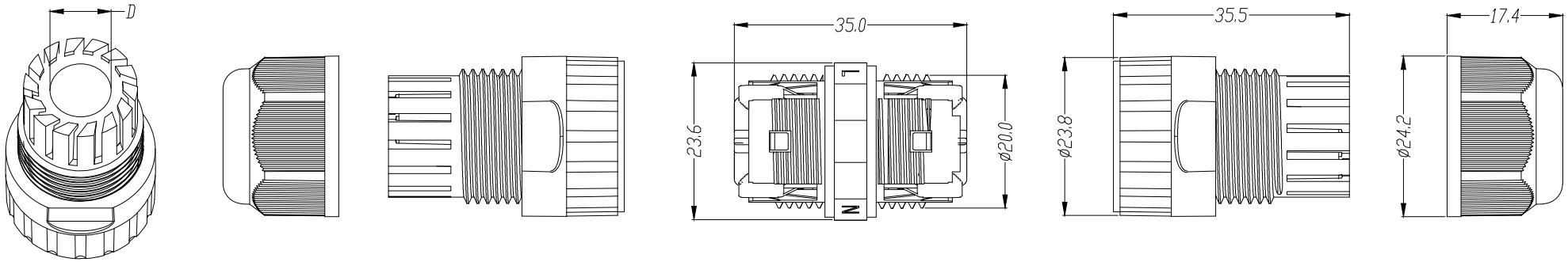

Weight	MEAS	Each carton number	G.W.
26.2g	42x30x34cm	600 pcs	16.6kg

TOLERANCE UNSPECIFIED		
X. ±0.35	X.XX ±0.10	X.° ±3°
X.X ±0.20	X.XXX ±0.05	X.X° ±2°
		X.XX° ±1°

UNIT	mm	DRAW	EDDIE / 2022.03.31	PART NO	EW-P20-03301BB##
SCALE	1:1	CHKD		DWG NO	EW-P20-03301BB##
SHEET	1/1	APPD		TITLE	EW-P20-3P_WATERPROOF_CONNECTOR

FUCON