STANDARD PROFILE

120kn Suspension Tempered Glass Insulator U120b

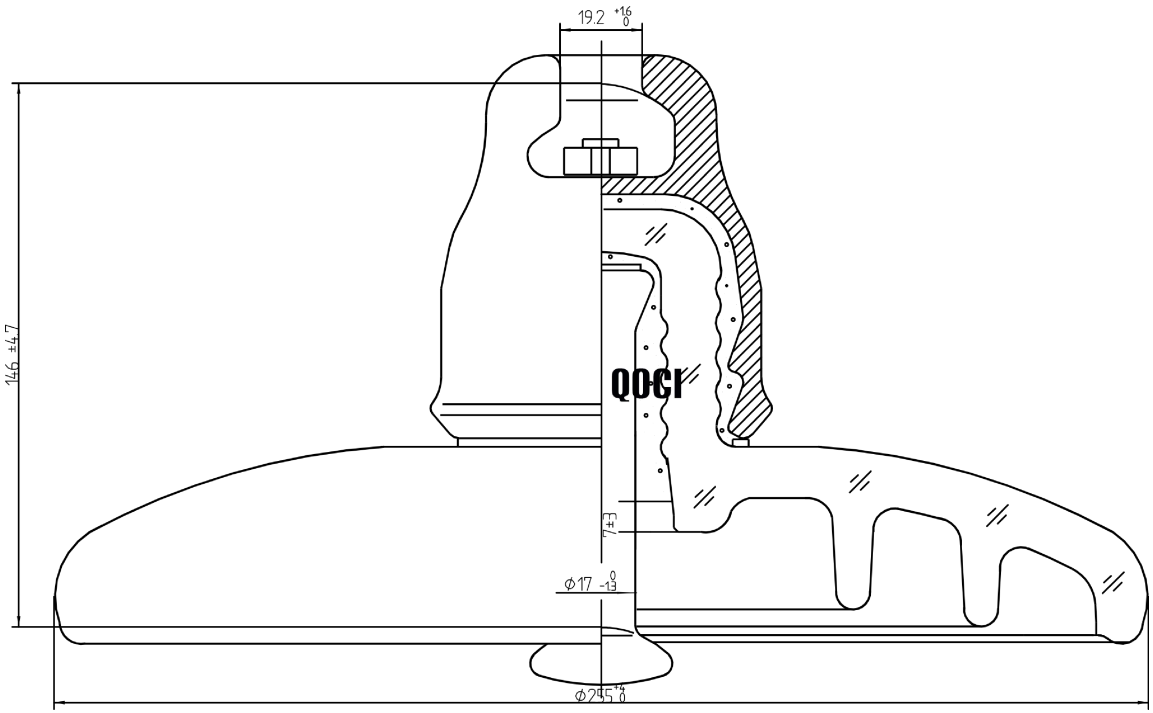



IEC designation		U120BS	U120BL
Mechanical failing load	kn	120	120
Diameter D	mm	255	255
Height H	mm	127	146
Creepage distance L	mm	320	320
Socket coupling	mm	16	16
Wet power frequency withstand voltage	kv	40	40
Dry lightning impulse withstand voltage	kv	100	100
Power frequency puncture voltage	kv	130	130
Radio interference voltage(10kV 1MHz)	μv	50	50
Corona visual test	kv	18/22	18/22
Power frequency electric arc voltage	ka	0.12s/20kA	0.12s/20kA
Impulse puncture voltage	P.U	2.8	2.8
Net weight per unit	kg	3.5	3.6



Cap | Dielectric | Regular pin | Pin with zinc sleeve | Split pin(R) | Split pin(W)