XINGYUTENG METER

QYB100

PRESSURE TRANSMITTER



USER MANUAL

Installation · Operation · Maintenance

Document No.: QYB100-UM-EN
Version: V1.0

Date: 2026
website: www.xytsensor.com

1.Overview

The pressure transmitter uses a piezoresistive sensing element with a stainless steel isolating diaphragm. It undergoes automated computer testing, and laser-trimmed zero-point and span temperature compensation is applied over a wide temperature range. The signal-conditioning circuit, housed within the stainless steel enclosure, converts the sensor signal into a standard output signal. The entire product is subjected to rigorous component-level, semi-finished, and finished-product testing as well as burn-in procedures.

Its excellent reliability, versatile adaptability, and flexible product configurations, this transmitter is widely used for on-site pressure measurement and control in industries such as petroleum, chemical processing, metallurgy, power generation, and hydrology.

2. Features

- 316L stainless steel isolating diaphragm construction
- High-brightness display with stable output readings
- Excellent EMI immunity and outstanding long-term stability
- Vibration-resistant and shock-resistant design
- Suitable for measuring ambient-temperature media with reliable long-term operation
- Multiple output options available
- Wide measuring range; supports absolute pressure, gauge pressure, and sealed gauge pressure

3.Specifications

Measuring media	Liquid/gas/oil	
Measuring range	-0.1~0~100Mpa	
Overload pressure	%FS	150
Bburst pressure	%FS	250
Power supply	VDC	12-30
Output signal		4~20 mA/0-5V/10V
Zero offset	%FSO	1 maximum
Accuracy	%FSO	±0.5 0.25%(Option)
Long-term stability of zero	%FSO/year	0.15
Load resistance	Ω	250~1150Ω (for 4~20mA current loop)
Storage temperature range	℃	-30~+80
Operating temperature range	℃	-40~+80
Process connection	thread	G1/2 G1/4 NPT1/2 NPT1/4 (As request) PTFE Thread G1/2 NPT1/2
Electrical connection	Hirschmann DN43650/PG7/M12	
Environment protection	IP rating	IP 65
Pressure membrane material	Silicon	
Housing material	SS304/ SS316(optional)	
Physical Specifications		
Media Compatibility	All media compatible with 316L stainless steel	
Housing	304 or 316 stainless steel	
Diaphragm	316L stainless steel	
Seal Ring	Viton or NBR	
Oil Filling	Silicone oil	
Protection	IP65(Standard), IP66(only for cable outlet) IP68 for level type pressure transmitter	
Net Weight	Approx.185g	

4.Dimensions

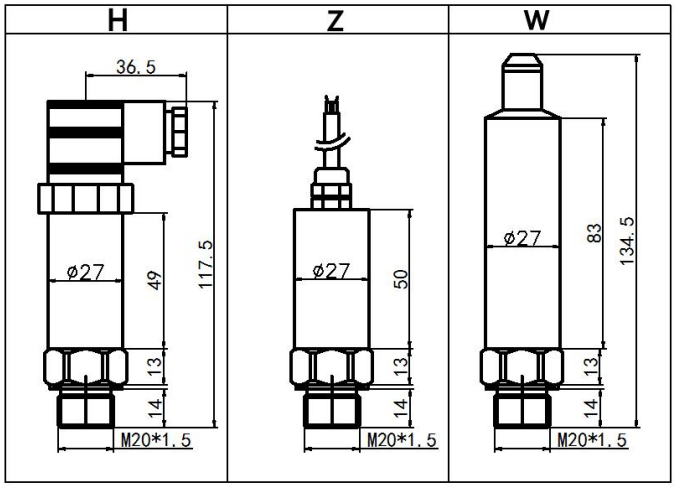

H: DN43650

Z: PG7 Cable Connection

M:M12 Cable Connection

5.Wiring Configuration

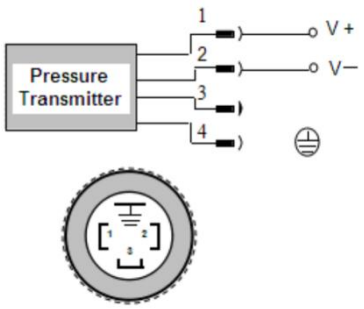

Wiring Type 2-Wire Current	Pin 1:V+ (Power+) Pin 2:Current Output
Wiring Type3-Wire Voltage	Pin 1:V+ (Power+) Pin 2:GND Pin 3:Voltage Output
Wiring Type4-WireRS485	Pin 1:V+ (Power+) Pin 2:GND (Power−) Pin 3:RS485A ⏚:RS485B

6.Installation

The transmitter can be directly mounted on a hydraulic pipeline via the process connection fitting. In demanding applications subject to severe vibration or shock, mechanical decoupling can be achieved by using a flexible capillary between the process fitting and the transmitter.

7.Warranty

Provided the instrument is operated and maintained in accordance with the specified guidelines, a one-year warranty is offered from the date of manufacture. After the warranty period, repairs can be carried out at our facility. We warmly welcome inquiries, technical consultations, and feedback from our customers at any time.



Baoji XingYuTeng Measure and Control Instruments Co.,Ltd.
Address:Floor 5,Building 10,High-end Equipment Industrial Park,
Xizhong Road,High-tech Development Zone,Baoji,Shaanxi,China(Postcode:721000)
info@xytck.net www.xytsensor.com