WR19 Right Angle Adapter

P/N: 19RWA1.85

1. Electrical Specifications

Frequency Range	40.0 – 60.0GHz
VSWR	1.4:1 Max.
Waveguide	WR19
Flange	UG-383/U
Connector	1.85mm-Female
Material	Brass
Finishing	Gold plated, Black Paint

2. Outline Drawing (for reference)

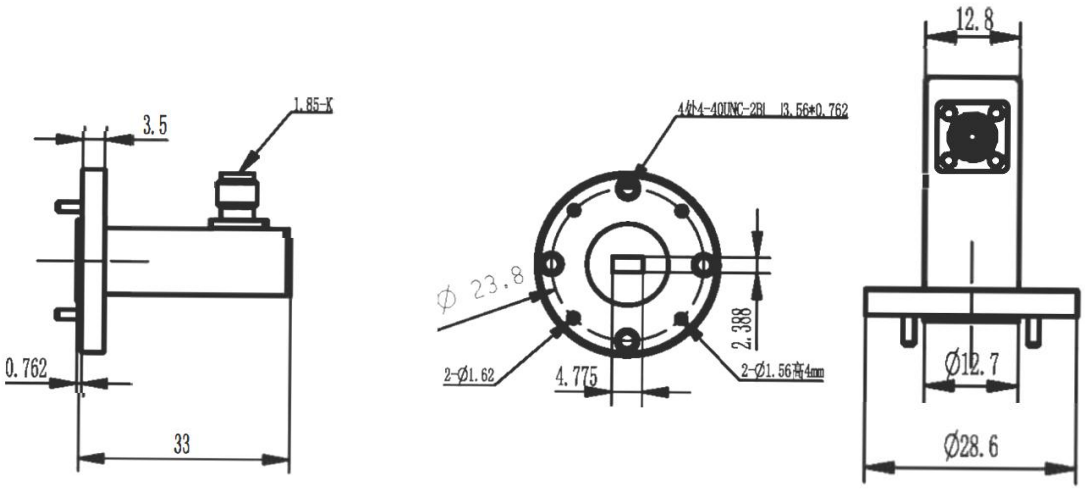

Unit: mm