REV	Date	Description
X1	2025/08/29	New issue

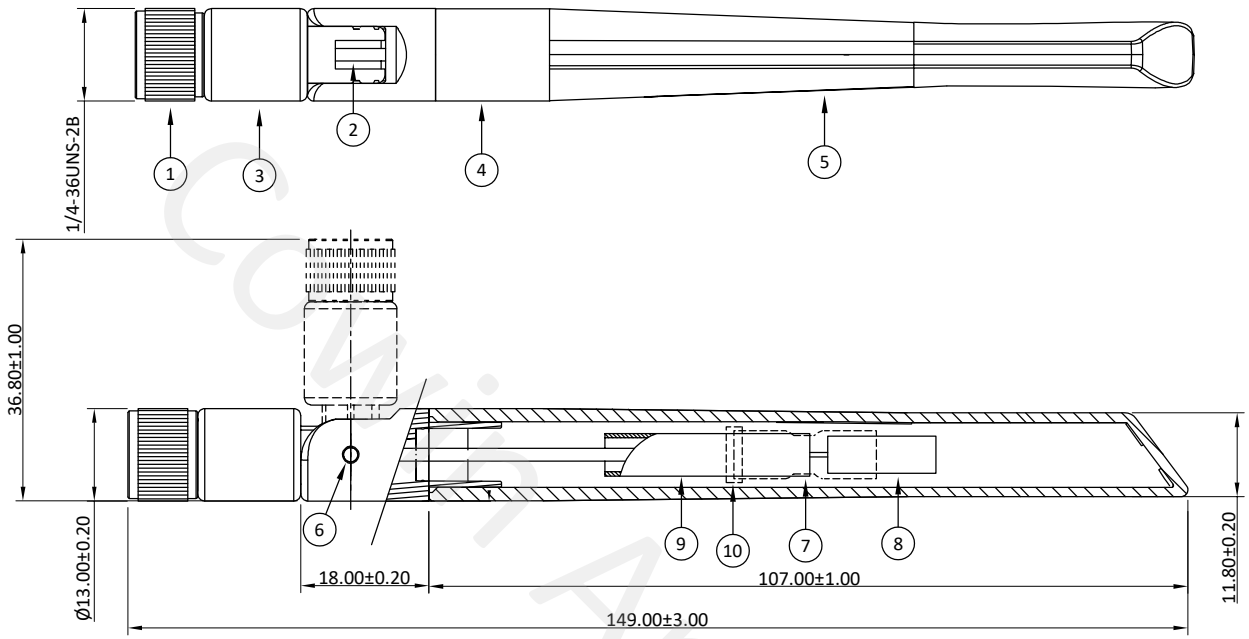

Specification(Free Test):

Frequency Range: 2.4-2.5/5.15-5.85G
Impedance: 50Ω
V.S.W.R: ⩽ 2
Operating Temperature: -40℃～+80℃
100% Continutity,short and open circuit test
Materials,parts and process must by environmentally (ROHS and REACH)

NO	Name	Description	Q'TY	Remark
10	Single-sided adhesive tape	EVA;18*4*1.3m;3M 9888T	1	Black
9	Signal tube 2	Copper;Ø5.8*28.8*Ø1.6mm	1	Tin-plating
8	Signal tube 1	Copper;Ø5.8*15.2*Ø0.8mm	1	Tin-plating
7	Heat shrink tubing	V4 Ø6.0*20.0*0.15mm;Ordinary	1	Black
6	Rivet	POM	2	Black
5	Shell	TPE	1	Black
4	Upper fixed seat	PC	1	Black
3	Lower fixed seat	PC+PBT	1	Black
2	Cable	RG178 Silver tin cable	1	Brown
1	Connector	RP-SMA Male	1	Black(POM)

XX.	±5.0	Approved: Terry	Customer		
X.	±3.0		Part NO.		
.X	±1.0	Checked:	Part name	External Antenna	
.XX	±0.2		CW P/NO.	CW-WZ-0218	
.XXX	±0.1	Drawing: Zhouaizhen	REV	Unit	File :
			X1	mm	Sheet : 1/1

Cowin Antenna

Cowin Antenna