COWIN

Product Datasheet

8dBi 4800-5000MHz Omni Antenna



Electrical Specifications 电性指标	
Part Number 料号	**CWBLG4850V8S**
Frequency Range 频率范围	**4800-5000MHz**
Bandwidth 带宽	**200MHz**
Peak Gain 峰值增益	**8dBi**
Radiation Direction 辐射方向	**Omnidirectional**
Polarization 极化方式	**Vertical**
Electrical Downtilt 电下倾角	**/**
Half Power Beamwidths 半功率波瓣宽度	**/**
First Upper Sidelobe Suppression 第一上旁瓣抑制	**/**
Front-to-rear ratio 前后比	**/**
Impedance 输入阻抗	**50Ω**
VSWR 电压驻波比	**≤2.0**
Maximum Power 最大功率	**50W**
Lightning Protection 雷电保护	**DC Grounding**

Cowin Antenna

Mechanical Specifications 机械性能	
Connector Type 接头类型	**SMA male**
Connector Position 接头位置	**Bottom**
Cable type 线材类型	**/**
Antenna Size 天线尺寸	**500*20MM**
Antenna Weight 天线重量	**0.25KG**
Radome Material 外罩材料	**Fiberglass**
Radome Colour 外罩颜色	**Gray**
Mechanically Adjustable Tilt Angle 机械可调倾角	**/**
Temperature Range 温度	**-40-85℃**
Extreme Wind Speed 极限风速	**60m/s**
Pole Diameter 抱杆直径	**35-50MM**
Mounting Method 安装方式	**Use with magnetic suction plates and other mounting bases**
Mounting Model 安装件型号	**/**
Environmental Standards 环保标准	**ROHS/REACH**

Cowin Antenna

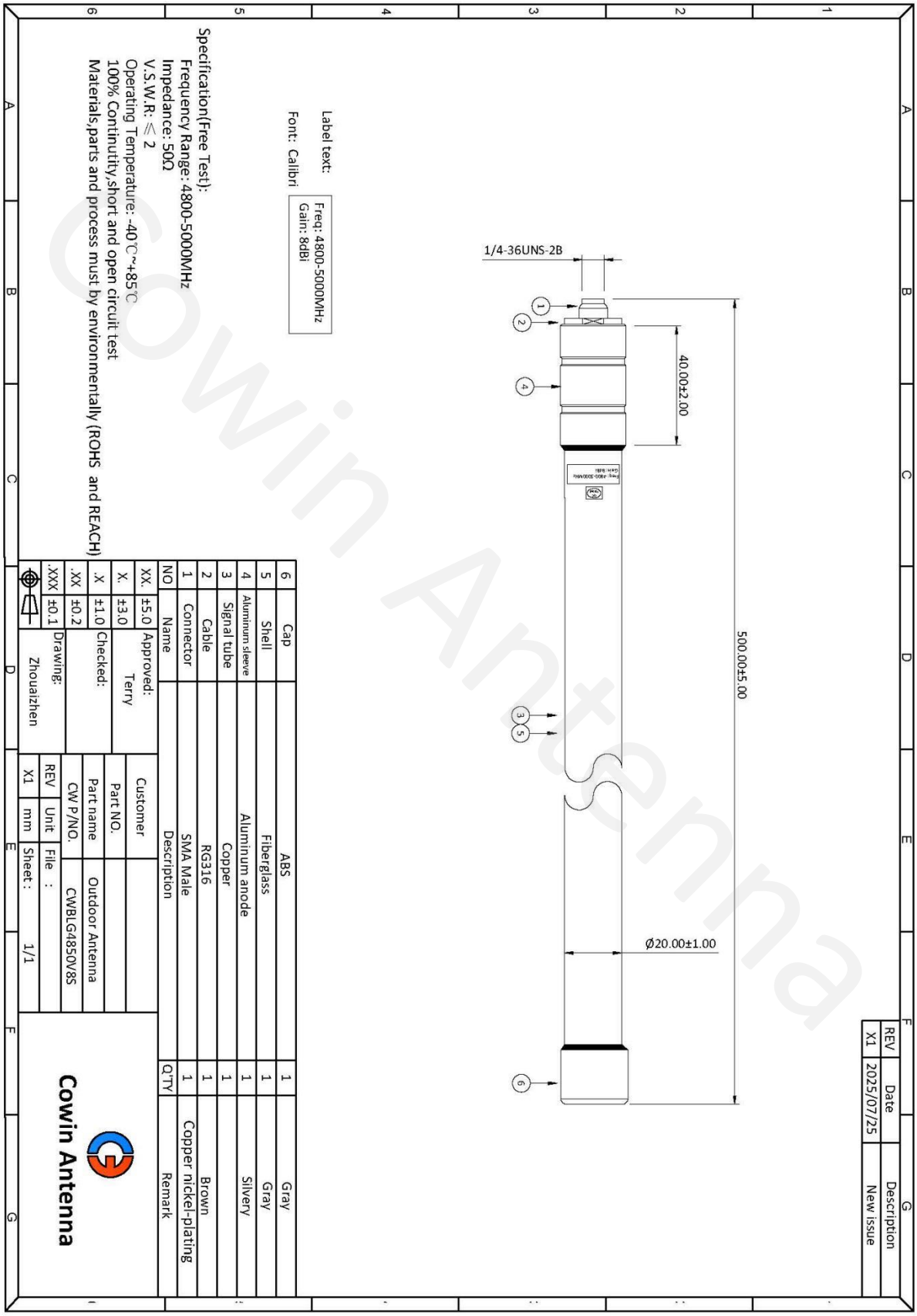

Cowin Antenna

V.S.W.R

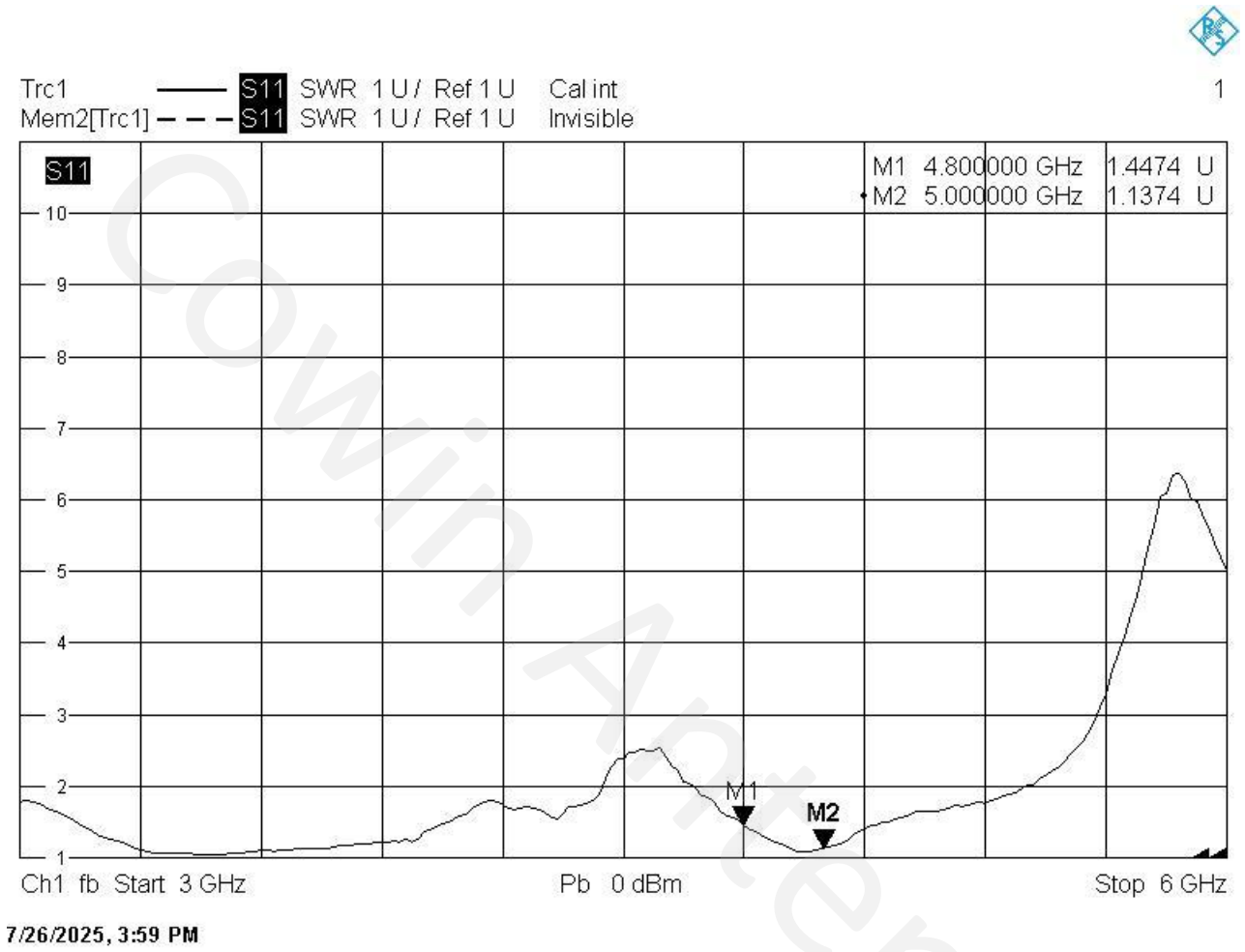

Cowin Antenna

Efficiency

Frequency (MHz)	Efficiency (%)
4800	68.77
4900	60.48
5000	61.84

Cowin Antenna

Peak Gain

Frequency (MHz)	Max Gain (dBi)
4800	7.82
4900	7.88
5000	7.16

Cowin Antenna

2D Radiation Patterns

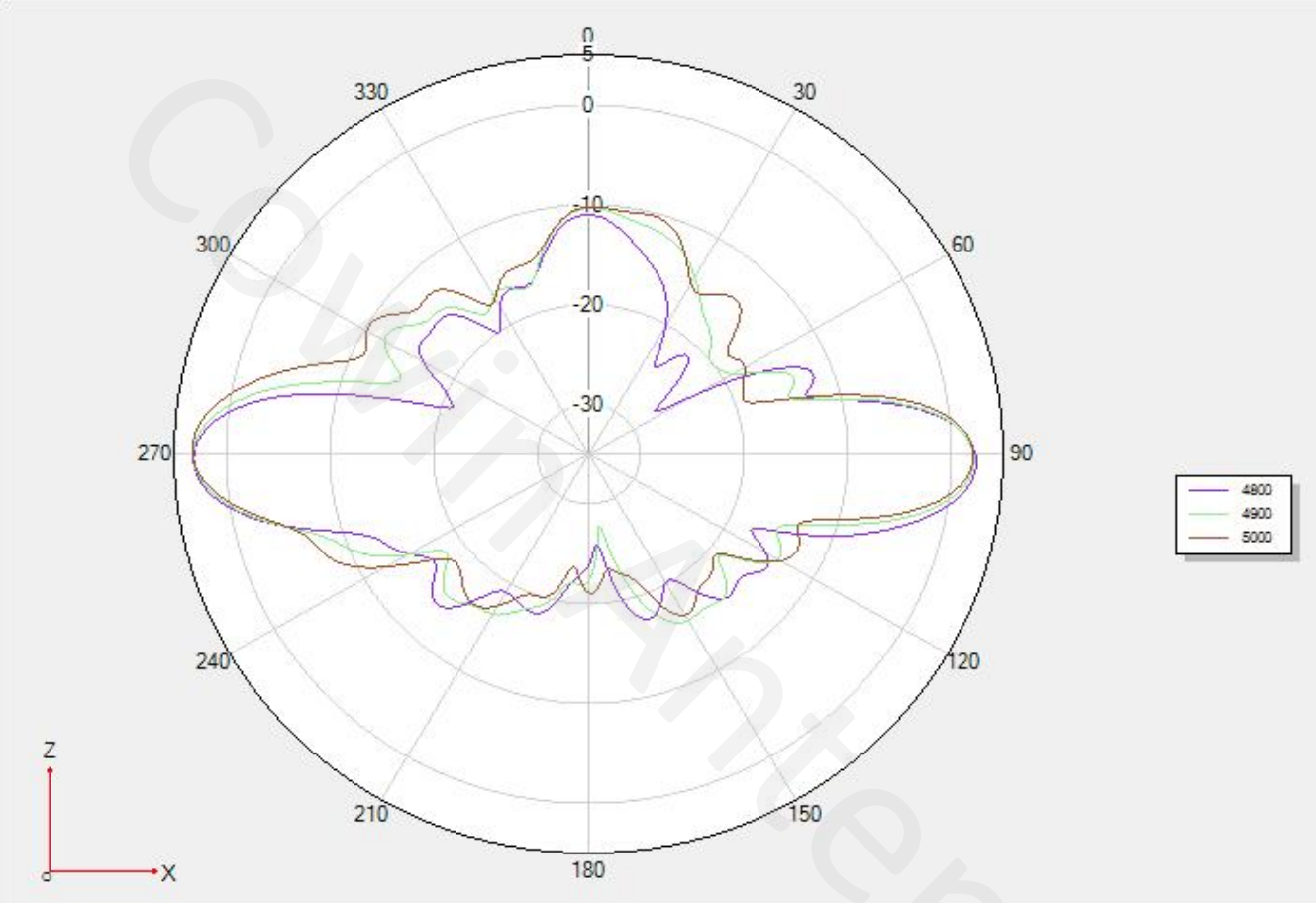

Cowin Antenna

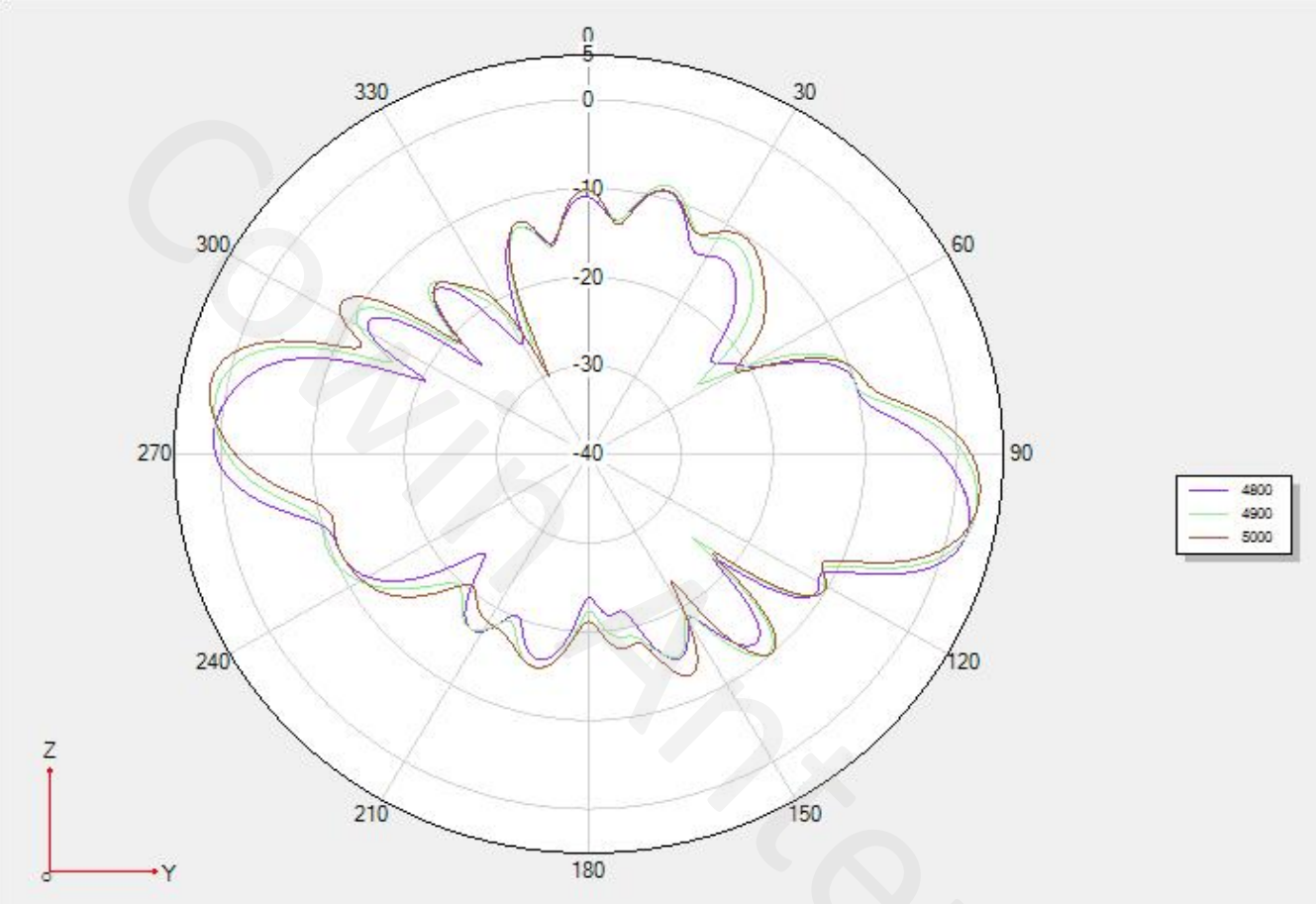

Cowin Antenna

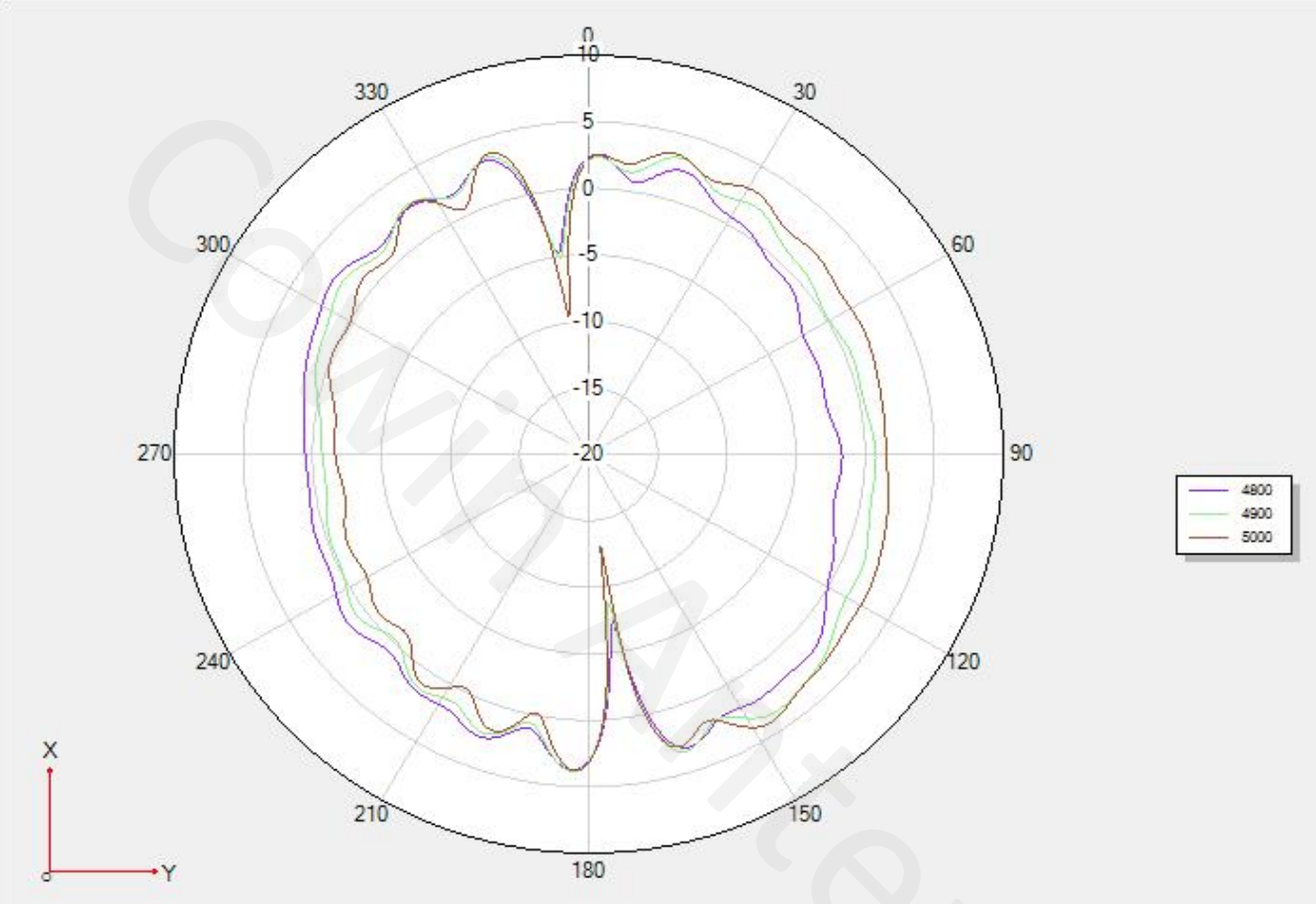

Cowin Antenna