COWIN

# Product Datasheet

## 6dBi 1950-2050MHz Omni Antenna



| Electrical Specifications 电性指标 | |
|---|---|
| **Part Number** 料号 | **CWBLG19200V6S** |
| **Frequency Range** 频率范围 | **1950-2050MHz** |
| **Bandwidth** 带宽 | **100MHz** |
| **Peak Gain** 峰值增益 | **6dBi** |
| **Radiation Direction** 辐射方向 | **Omnidirectional** |
| **Polarization** 极化方式 | **Vertical** |
| **Electrical Downtilt** 电下倾角 | **/** |
| **Half Power Beamwidths** 半功率波瓣宽度 | **/** |
| **First Upper Sidelobe Suppression** 第一上旁瓣抑制 | **/** |
| **Front-to-rear ratio** 前后比 | **/** |
| **Impedance** 输入阻抗 | **50Ω** |
| **VSWR** 电压驻波比 | **≤2.0** |
| **Maximum Power** 最大功率 | **50W** |
| **Lightning Protection** 雷电保护 | **DC Grounding** |

Cowin Antenna

| Mechanical Specifications 机械性能 | |
|---|---|
| **Connector Type** 接头类型 | **SMA male** |
| **Connector Position** 接头位置 | **Bottom** |
| **Cable type** 线材类型 | **/** |
| **Antenna Size** 天线尺寸 | **500*20MM** |
| **Antenna Weight** 天线重量 | **0.25KG** |
| **Radome Material** 外罩材料 | **Fiberglass** |
| **Radome Colour** 外罩颜色 | **Gray** |
| **Mechanically Adjustable Tilt Angle** 机械可调倾角 | **/** |
| **Temperature Range** 温度 | **-40-85℃** |
| **Extreme Wind Speed** 极限风速 | **60m/s** |
| **Pole Diameter** 抱杆直径 | **35-50MM** |
| **Mounting Method** 安装方式 | **Use with magnetic suction plates and other mounting bases** |
| **Mounting Model** 安装件型号 | **/** |
| **Environmental Standards** 环保标准 | **ROHS/REACH** |

Cowin Antenna

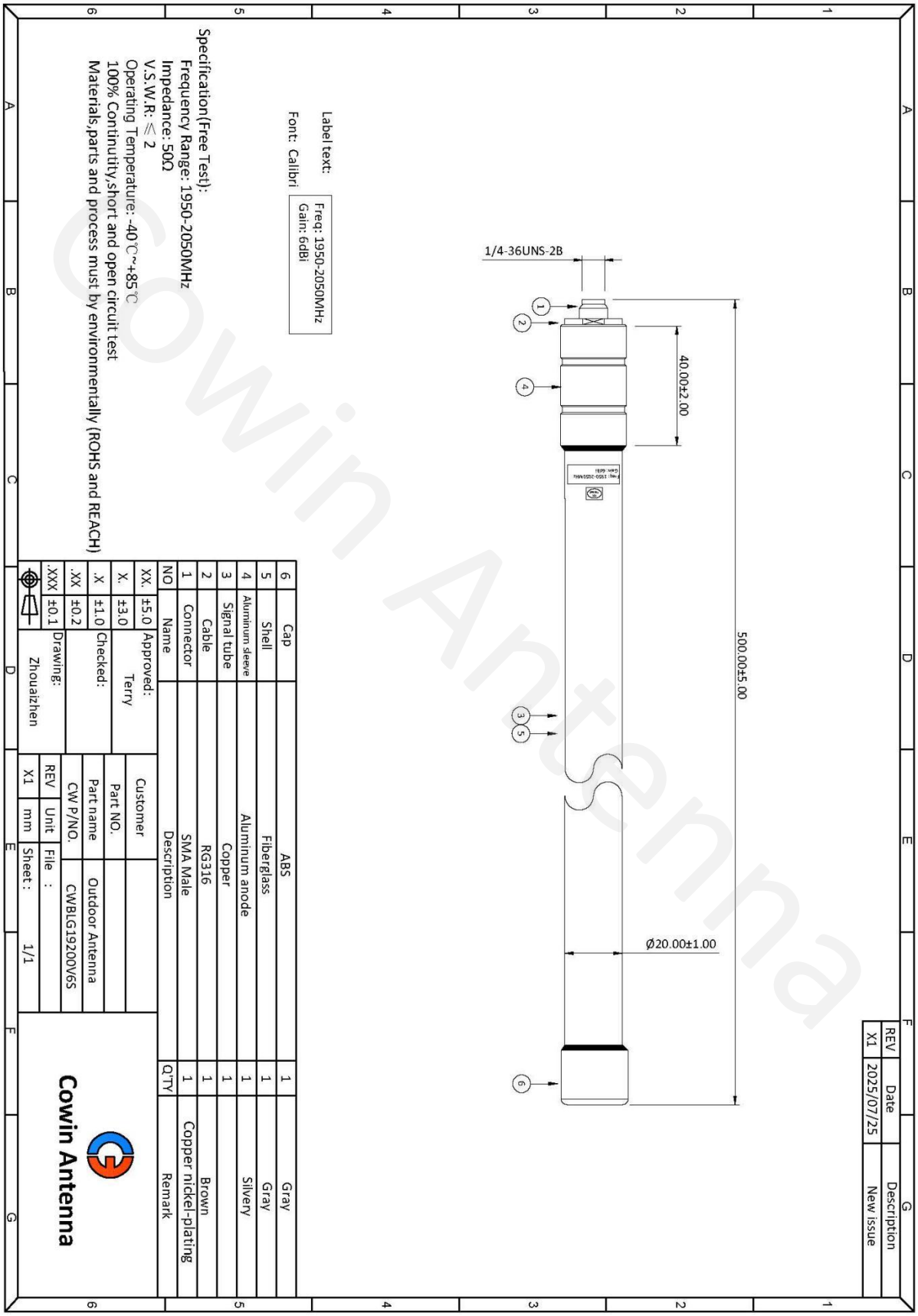
1/4-36UNS-2B
40.00±2.00
500.00±5.00
Ø20.00±1.00
Label text:
Font: Calibri
Freq: 1950-2050MHz
Gain: 6dBi
Specification(Free Test):
Frequency Range: 1950-2050MHz
Impedance: 50Ω
V.S.W.R: ≤ 2
Operating Temperature: -40℃~+85℃
100% Continutity,short and open circuit test
Materials,parts and process must by environmentally (ROHS and REACH)
REV
X1
Date
2025/07/25
Description
New issue
NO
Name
Description
Q'TY
Remark
6 Cap ABS 1 Gray
5 Shell Fiberglass 1 Gray
4 Aluminum sleeve Aluminum anode 1 Silvery
3 Signal tube Copper 1
2 Cable RG316 1 Brown
1 Connector SMA Male 1 Copper nickel-plating
XX. ±5.0
X. ±3.0
.X ±1.0
.XX ±0.2
.XXX ±0.1
Approved: Terry
Checked:
Drawing: Zhouaizhen
Customer
Part NO.
Part name Outdoor Antenna
CW P/NO. CWBLG19200V6S
REV X1
Unit mm
File :
Sheet : 1/1
Cowin Antenna
Cowin Antenna

**V.S.W.R**

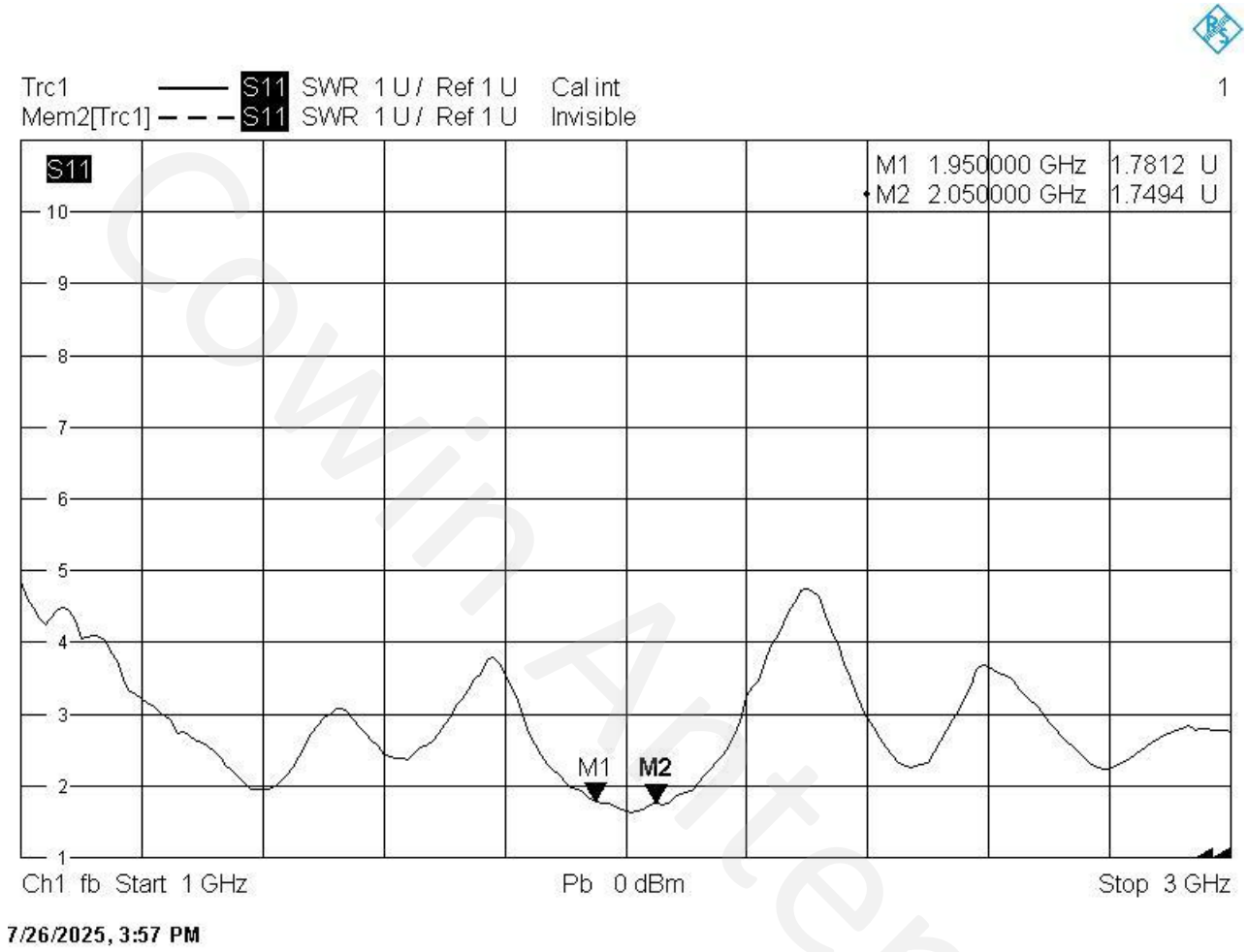


Cowin Antenna

## Efficiency

| Frequency (MHz) | Efficiency (%) |
|---|---|
| 1950 | 66.73 |
| 1975 | 66.73 |
| 2000 | 68.44 |
| 2025 | 64.77 |
| 2050 | 64.61 |

Cowin Antenna

**Peak Gain**

| Frequency (MHz) | Max Gain (dBi) |
|---|---|
| 1950 | 5.26 |
| 1975 | 5.47 |
| 2000 | 5.64 |
| 2025 | 5.07 |
| 2050 | 5.43 |

Cowin Antenna

**2D Radiation Patterns**

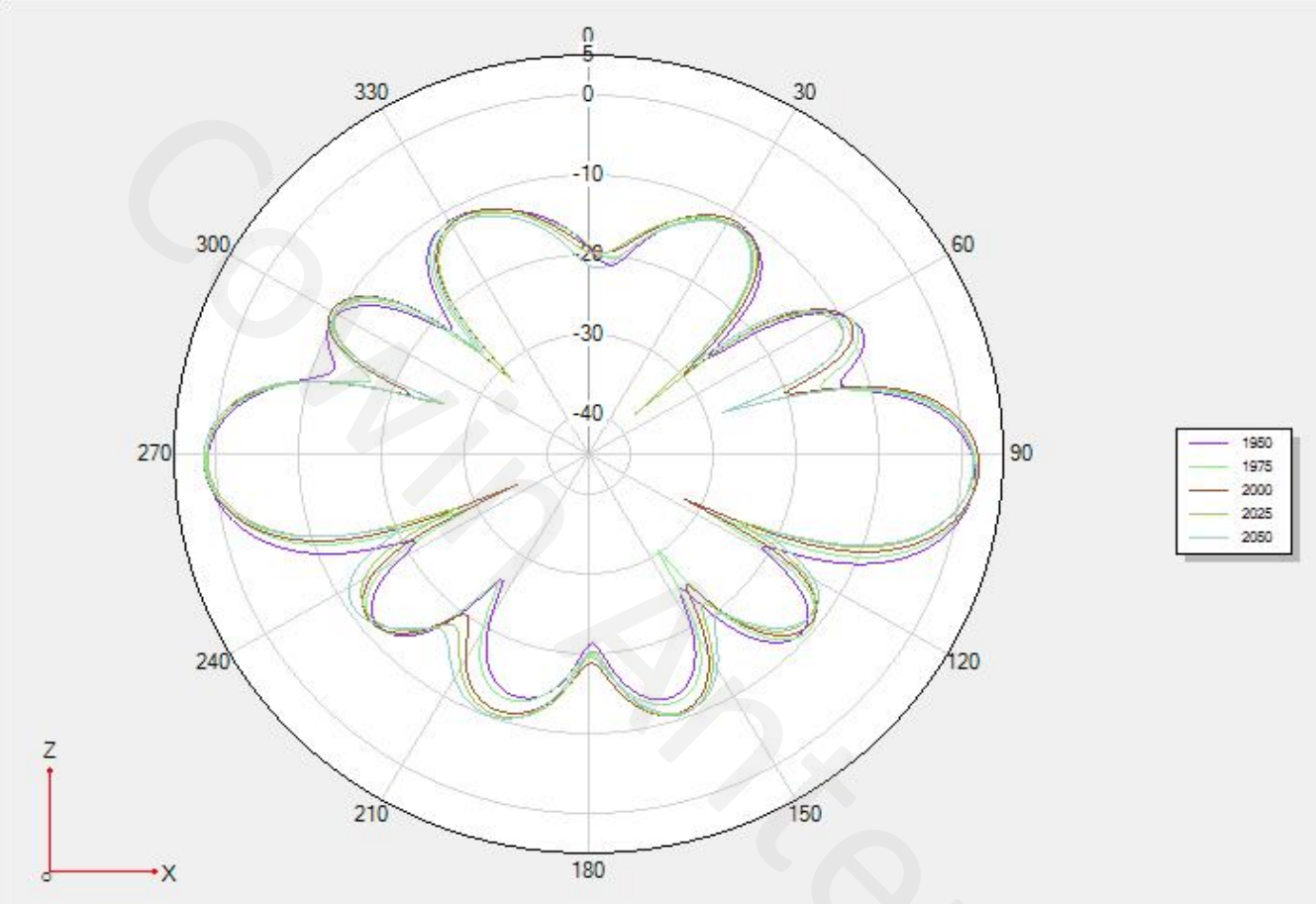


Cowin Antenna

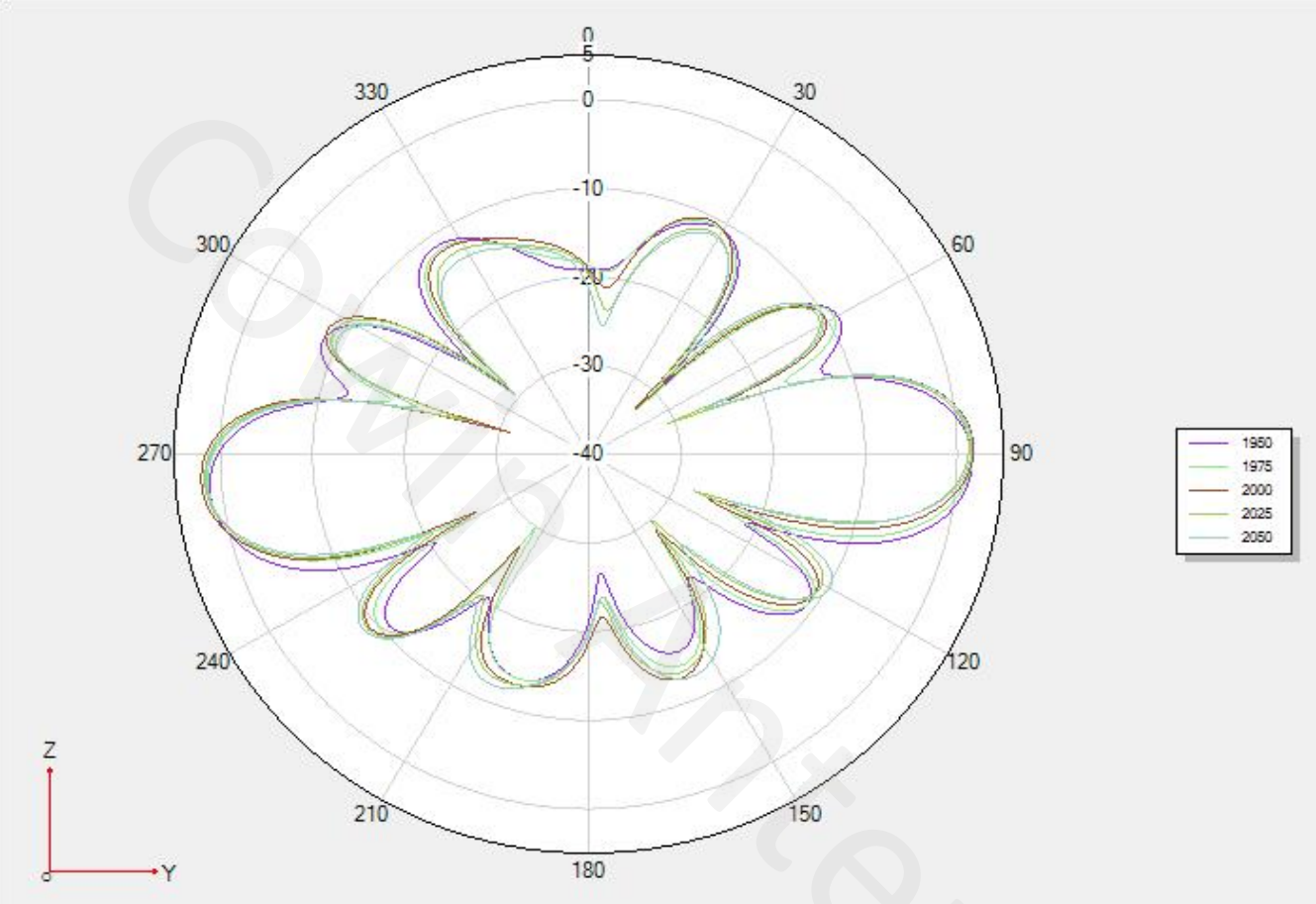


Cowin Antenna

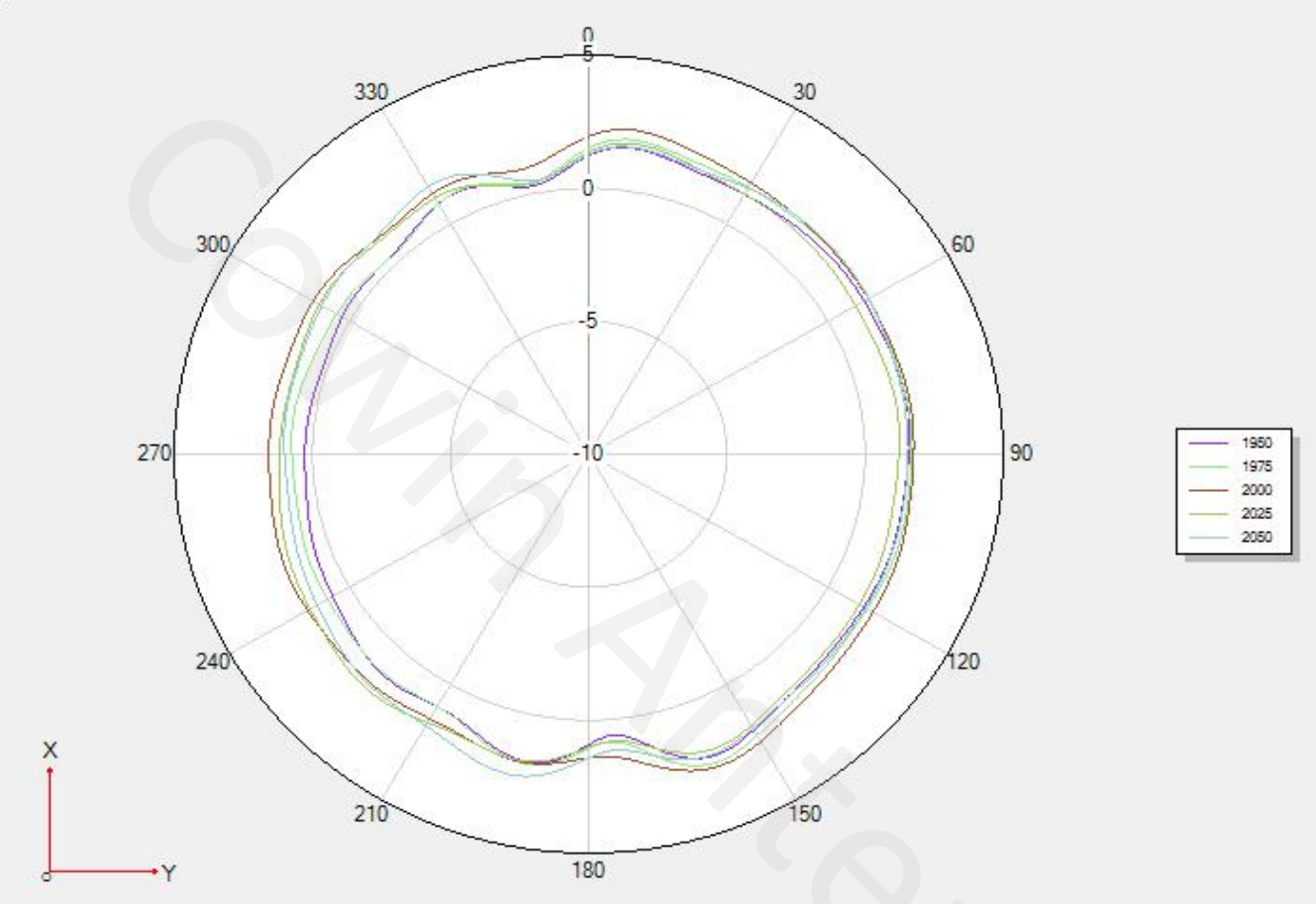


Cowin Antenna