| General technical parameters | | Electrical technical parameters | |
|---|---|---|---|
| Stepping angle | 1.2° | Rated voltage | 24V DC |
| Number of phases | 3 | Rated current | 5.8A |
| Insulation resistance | 100MΩMIN(500V DC) | Resistance | 0.5±15%Ω |
| Insulation level | Class B/winding | Inductance | 1.3±20%mH |
| Weight | About 1300g | Holding torque | 1.5N.m |
| Braking torque | 500gf.cm REF. | Moment of inertia | About 460g.cm² |

## Wiring Diagram

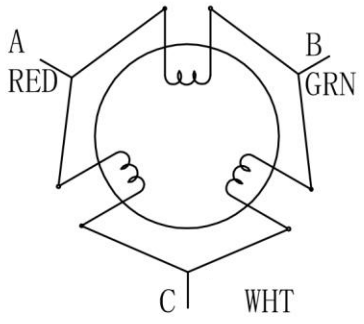


## Overall dimension: unit=mm

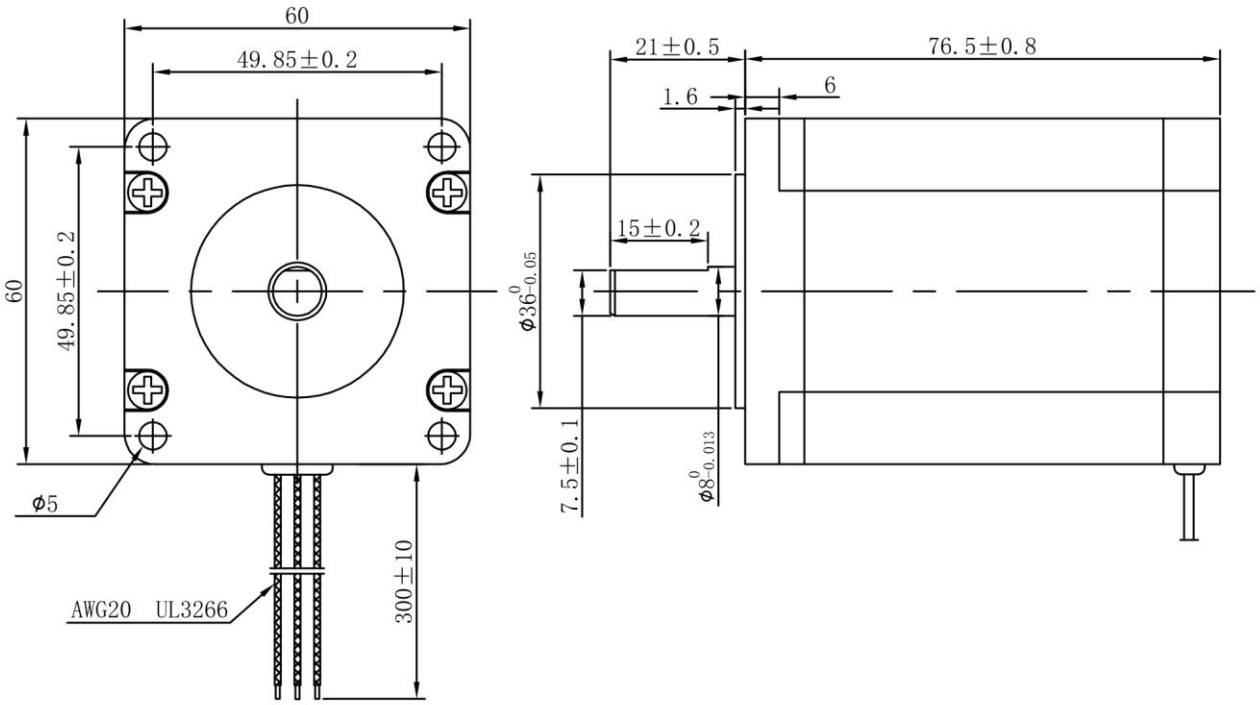


| TOLERANCES (EXCEPT AS NOTES) | ±0.3 |
|---|---|

| | | | | | | | |
|---|---|---|---|---|---|---|---|
| MATERIAL | ---- | | | | | | KST-60E46-0001 |
| FINISH | ---- | | | | | | |
| | | SYM | DATE | REVISION NO. | REVISIONS | BY | NOTE |

| DRAWN | DESIGNED | CHECKED | CHECKED | SCALE | 1:1 | TITLE | MOTR SPECIFICATION | THIRD ANGLI PROJECTION |
|---|---|---|---|---|---|---|---|---|
| Dongguan Kaifull 19-01-15 Xu Yuanhao | Dongguan Kaifull 19-01-15 Xu Yuanhao | | | | | DWG.NO. | Y-19-0115-0 | |
| | | | | Guangdong Kaifull Electronics Technology Co., Ltd. | | | SHEET | 1/1 |